QPT50

LIGHTING SYSTEM

MAGNETIC TRACK & ARCHITECTURAL LIGHTING



Light. In every direction.

ARCHITECTURAL LIGHTING SOLUTIONS

A coordinated collection of magnetic track lighting, architectural luminaires and system components for contemporary interiors.

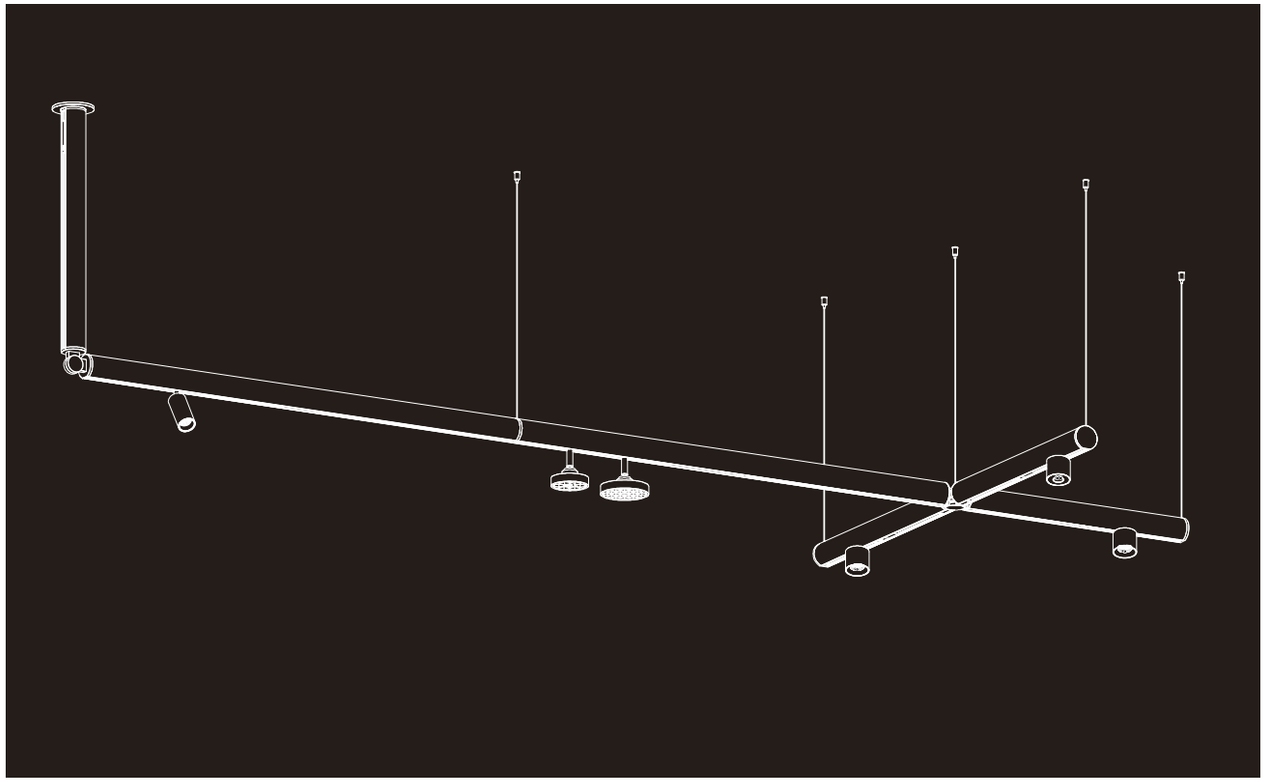

COLLECTION GUIDE

Design & brand	03
System & installation	06
Track profiles	11
System components	12
Luminaire collection	16
Technical notes	57
Model index	58
Contact	61

ARCHITECTURAL LIGHTING SOLUTIONS

MODERN LIGHTING DESIGN

Light brings structure to an interior. Linear illumination defines the architecture, while focused accents give objects and surfaces a clear visual presence.



LIGHT AS PART OF THE SPACE

Combine ambient and accent lighting to create a balanced setting for living, working and shared environments.

FLEXIBLE LIGHTING SYSTEMS

INNOVATION & FUNCTIONALITY



One visual language. Many possibilities.

Bring linear light, spotlights and pendant elements into a coherent architectural composition. Explore layouts that respond to the space and its intended use.

PLAN THE COMPLETE SYSTEM

Select compatible tracks, luminaires, connectors and power supplies using the technical information in this collection.

ABOUT ONELUX



BAKU, AZERBAIJAN

ONELUX is a lighting brand presented by General Lighting LLC in Azerbaijan.

We provide modern architectural and decorative lighting solutions for residential, commercial and professional projects.

Our range includes magnetic track lighting systems, LED spotlights, linear lighting and flexible architectural lighting solutions.

General Lighting LLC supports customers with product selection, lighting solutions and professional project requirements.

GENERAL ELEKTRIK lighting

GLOWING TRACK LIGHTS

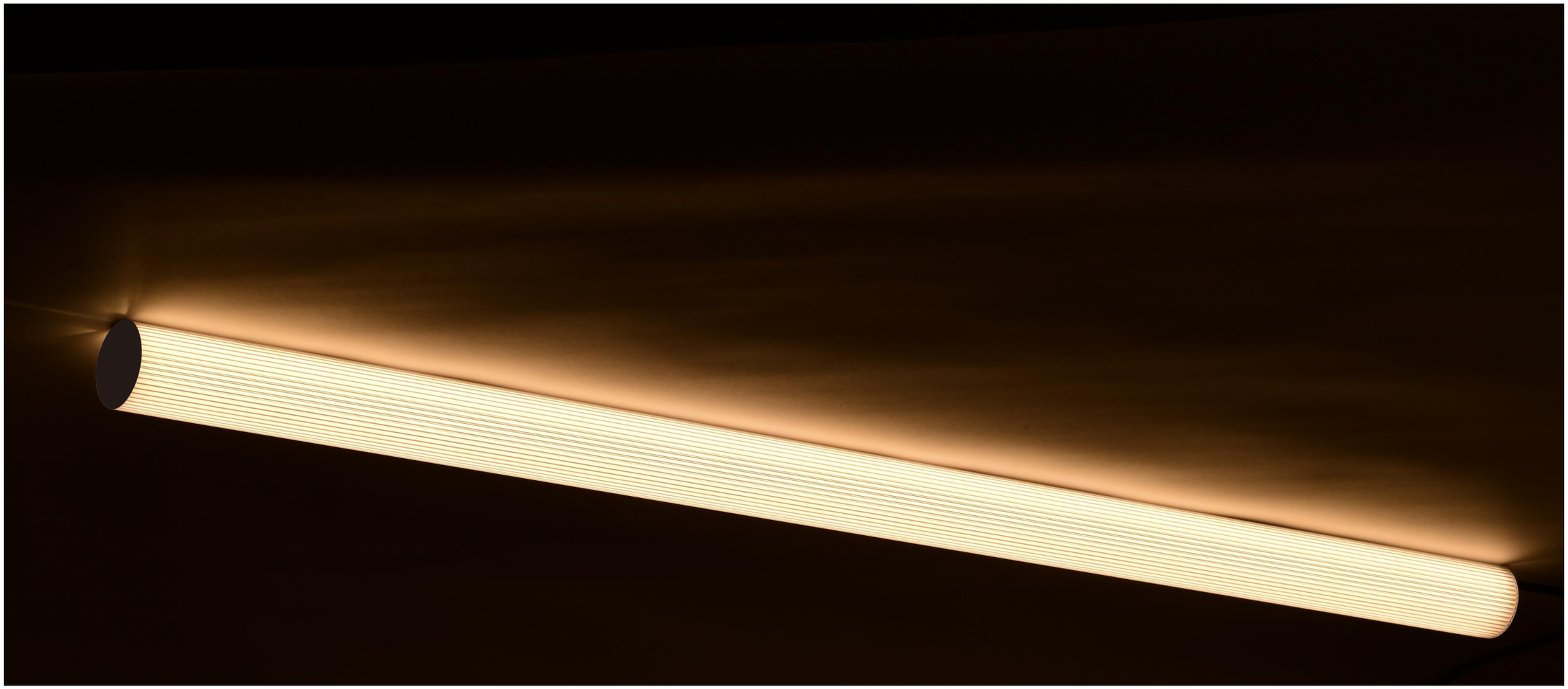

An adaptable track system for personalised lighting compositions.

SYSTEM ASSEMBLY / 1

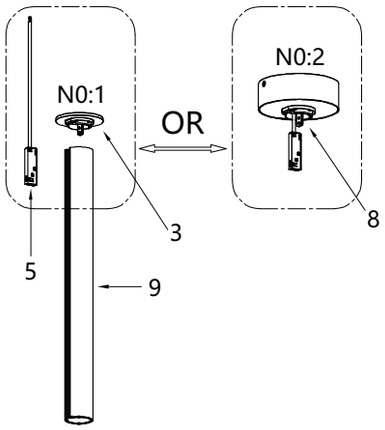

1	QPT-F01	2	QPT-END-A	3	QPT-W01	4	GL45-E67-D Over GL45-E183-D	8	QPT-B01	10	QPT-P02
5	HST-E00	6	HST-E01	7	QPT-L02					11	QPT-S04-P
9	QPT50-0.5M QPT50-1M QPT50-2M QPT50-2.5M										

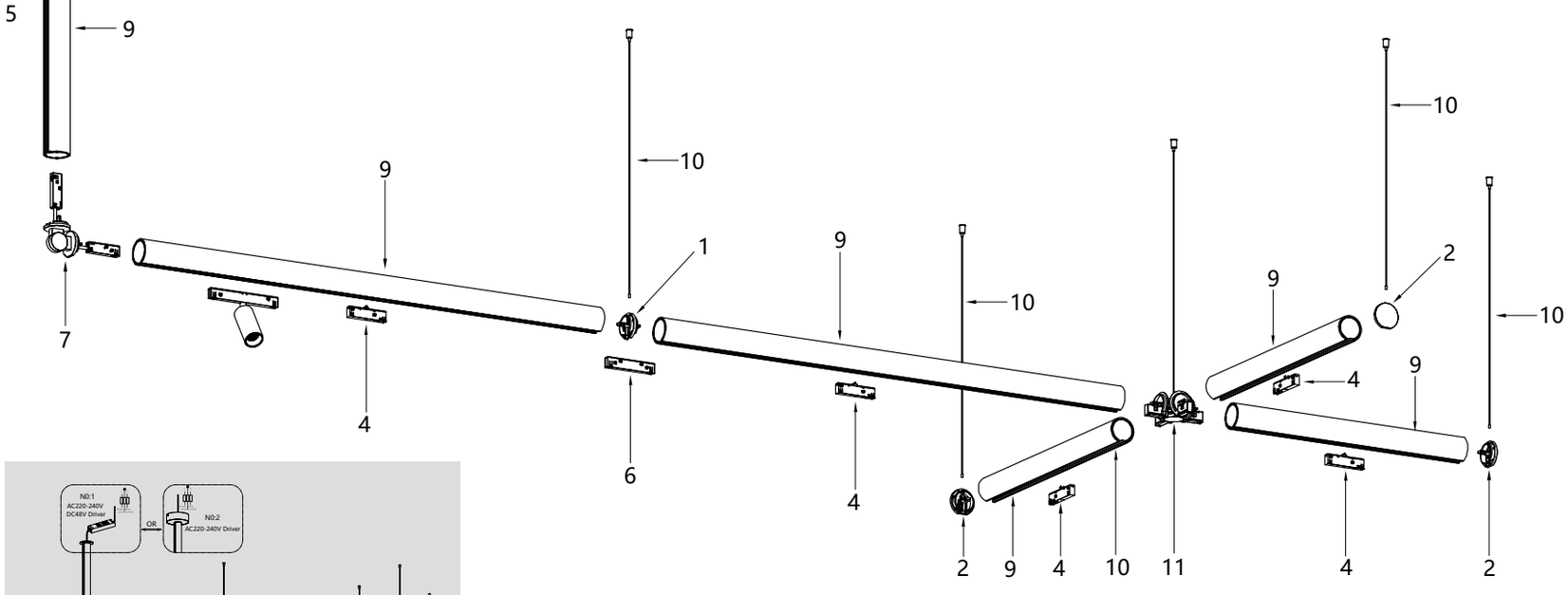

HST-E00 / HST-E01 / QPT-B01

SYSTEM ASSEMBLY / 2

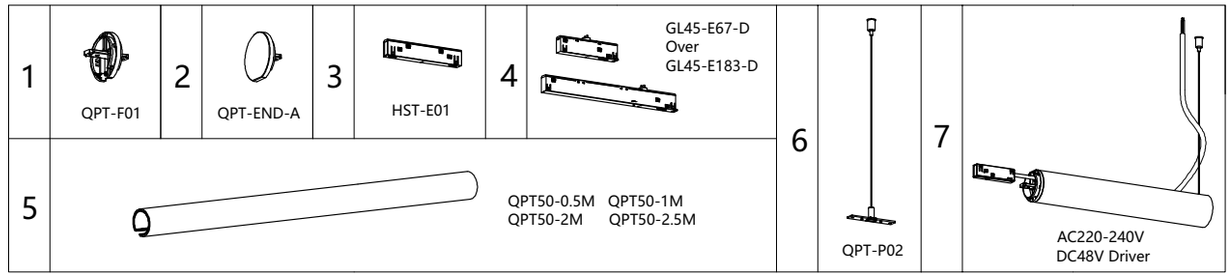

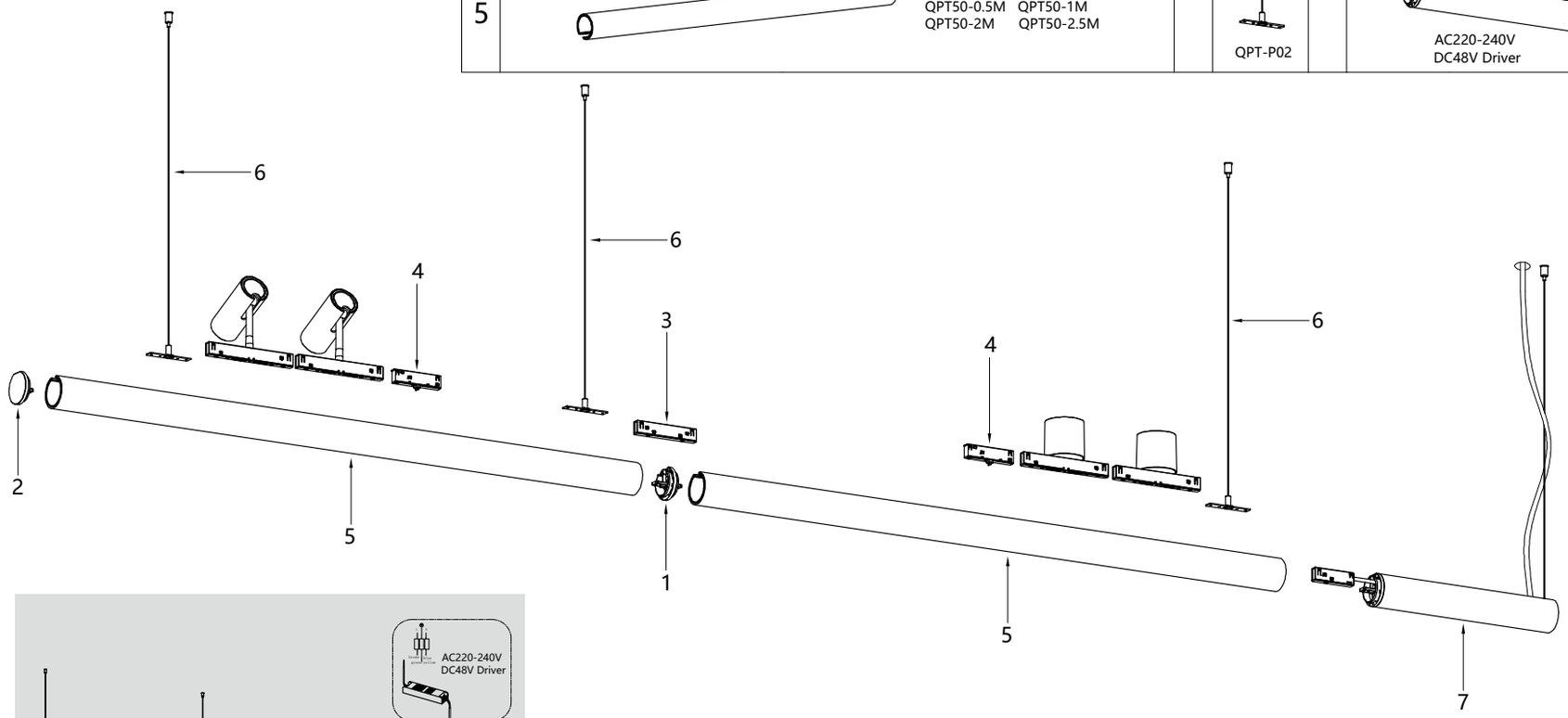

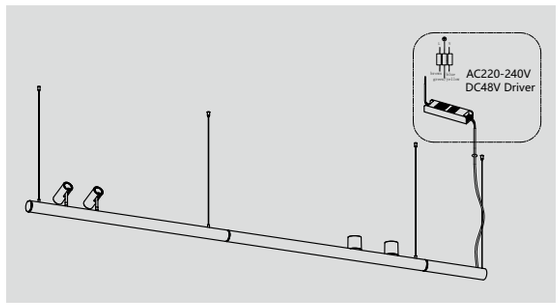

Original connection labels and electrical values retained.

LIGHT WITHIN THE ARCHITECTURE



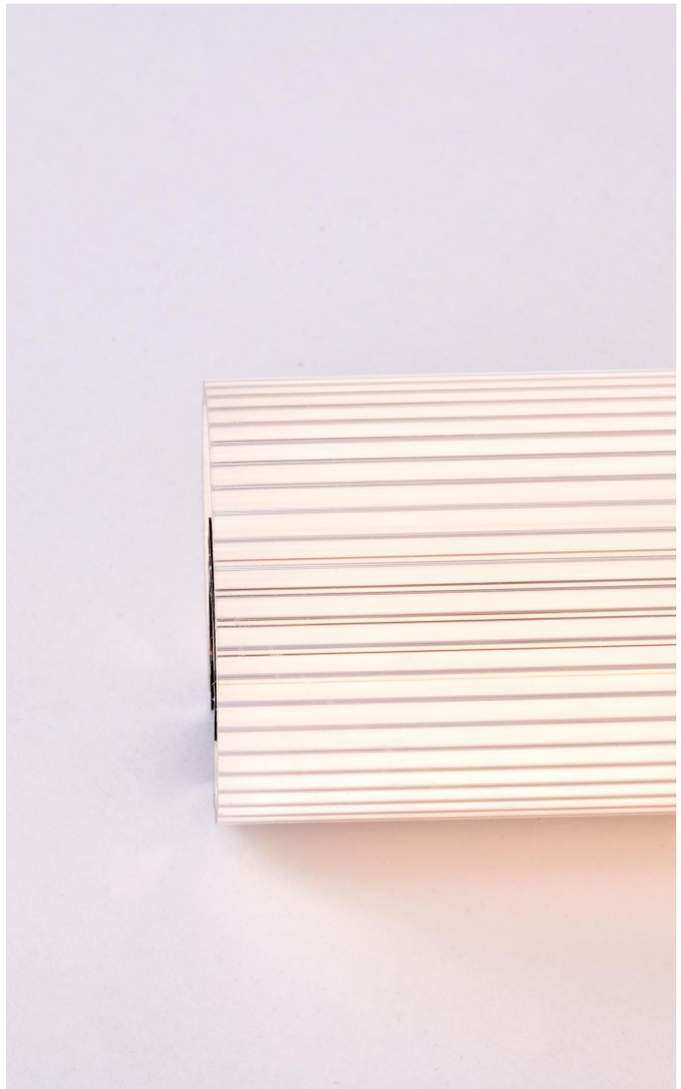

SYSTEM ASSEMBLY / 3

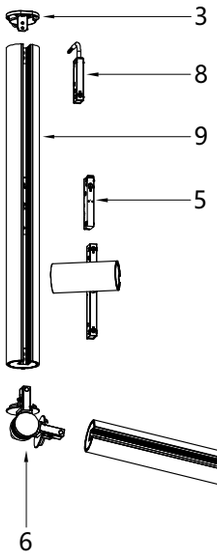

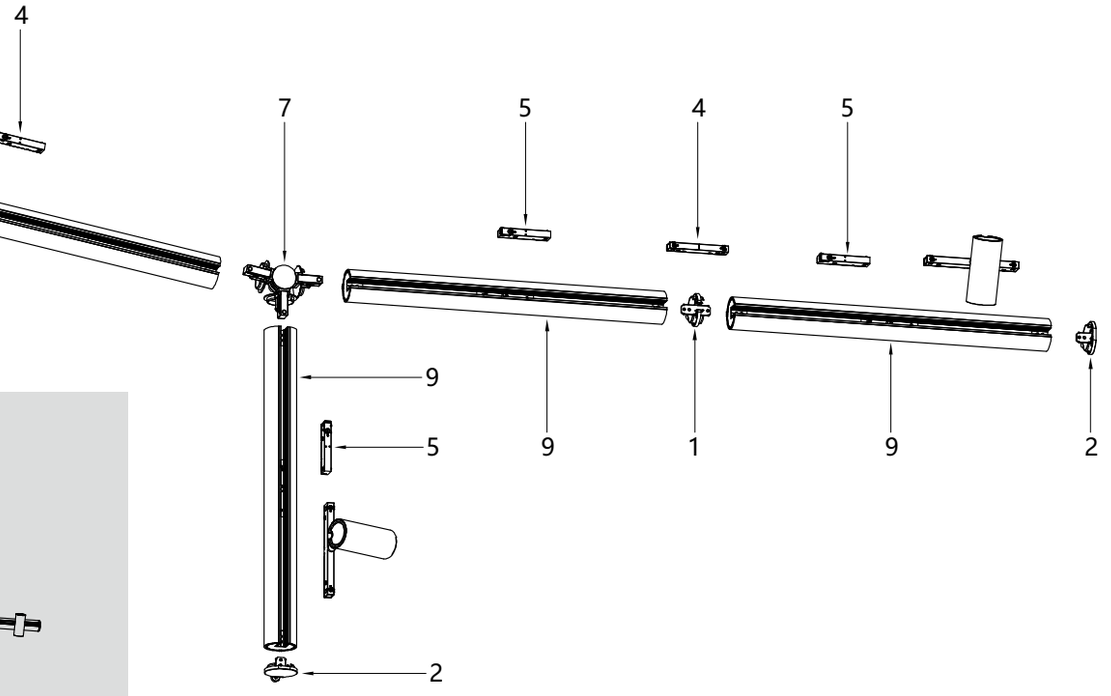

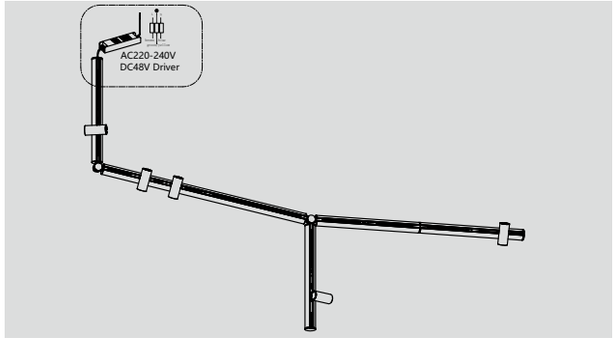

1	QPTW-F01	2	QPTW-END-A	3	QPTW-END-B	4	HST-E01	5	GL45-E67-D Over GL45-E183-D
6	QPT-S02-W	7	QPT-S03-W	8	HST-E00	9	QPT50-0.5M QPT50-1M QPT50-2M QPT50-2.5M		

Original connection labels and electrical values retained.

QPT50 / TRACK PROFILES



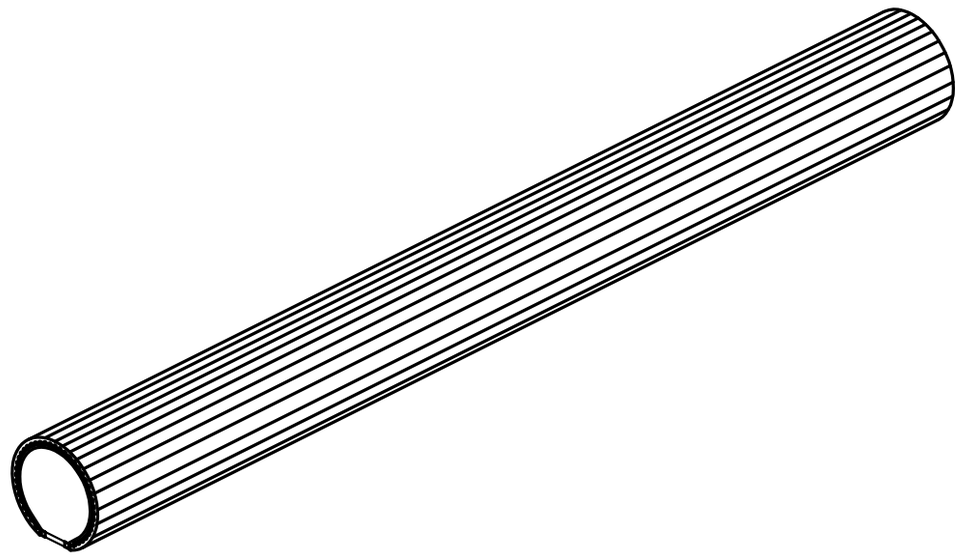

MODEL	INPUT	MAX. CURRENT	LENGTH (mm)	CRI	CT	MATERIAL
QPT50-0.5M	DC 48V	4A max	500	90	3000K/4000K	PC+Aluminium
QPT50-1M	DC 48V	4A max	1000	90	3000K/4000K	PC+Aluminium
QPT50-2M	DC 48V	4A max	2000	90	3000K/4000K	PC+Aluminium
QPT50-2.5M	DC 48V	4A max	2500	90	3000K/4000K	PC+Aluminium

MST Track (Flush mounting)

TRACK COMPONENTS / 1



QPT-END-A

Edge covering



QPT-END-B

Edge covering (Extruded hole)

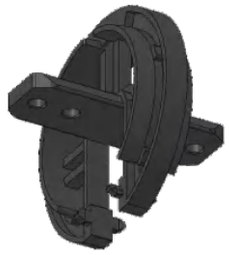

QPT-F01

Direct connection fixed frame



QPTW-END-A

With ceiling-mounted fixing columns



QPTW-END-B

With ceiling-mounted fixing columns (Extruded hole)



QPTW-F01

Direct connection fixed frame. With ceiling-mounted fixing columns

TRACK COMPONENTS / 2



QPT-W01

50-track ceiling fixing bracket



QPT-L02

Vertical rotation axis with energizing connector



QPT-P01

Power-on upward hoisting. Ladder assembly. 2-meter cable, 1 pair

QPT-P02

Power-on downward hoisting. 2-meter wire suspension assembly, 1 pair



GL45-E67-D

G45 Power Connection Head



GL45-E183-D

G45 rear power connector (smart long version). Constant voltage 48V 40W

TRACK COMPONENTS / 3



QPT-S02-P

Horizontal bidirectional connection plug.
Hang-mounted model



QPT-S03-P

Horizontal three-way connection plug. Elevated model



QPT-S04-P

Horizontal four-way connection plug. Hang-mounted model



QPT-S02-W

Horizontal bidirectional connection plug.
Ceiling-mounted model



QPT-S03-W

Horizontal three-way connection plug.
Ceiling-mounted model



QPT-S04-W

Horizontal four-way connection plug.
Ceiling-mounted model

TRACK AND LUMINAIRES



QPT50 / LUMINAIRE COLLECTION

HSB8513DR

Floodlights



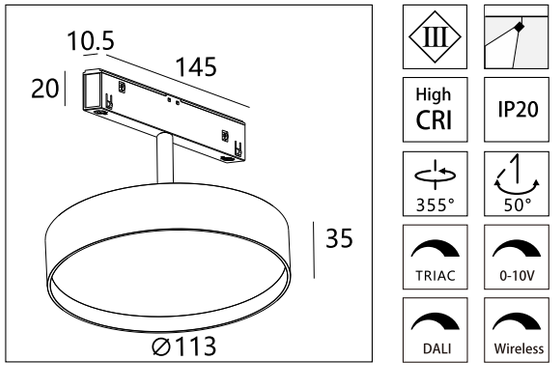

LED brand	SANAN
Input	DC48V
Power	12W
CCT	2700K/3000K/4000K/5000K
CRI	Ra>90
Size	Ø113 x 35mm
Beam angle	100°
Material	Aluminium
Body colours	Black
Voltage & current	48V

HSB8514DR

Floodlights



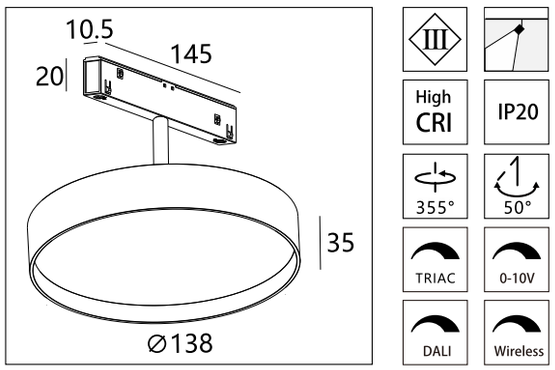

LED brand	SANAN
Input	DC48V
Power	18W
CCT	2700K/3000K/4000K/5000K
CRI	Ra>90
Size	Ø138 x 35mm
Beam angle	100°
Material	Aluminium
Body colours	Black
Voltage & current	48V

QPT50 / LUMINAIRE COLLECTION

HWA4150R-A

Spotlights



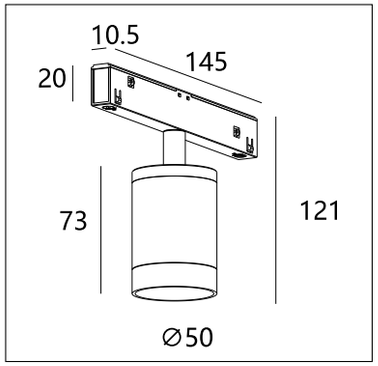

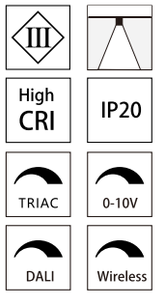

LED brand	OSRAM
Input	DC48V
Power	6W
CCT	2700K/3000K/4000K/5000K
CRI	Ra>90
Size	Ø50 x 73mm
Beam angle	15°/24°/36°
Material	Aluminium
Body colours	Black
Voltage & current	36V 150mA

HWB1001R

Floodlights



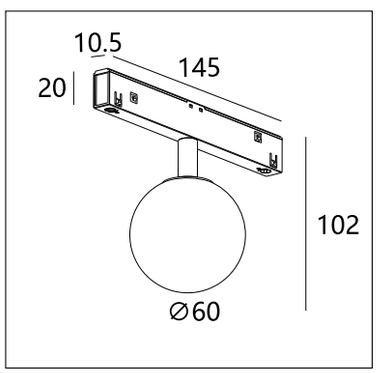

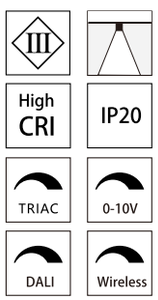

LED brand	SANAN
Input	DC48V
Power	3W
CCT	2700K/3000K/4000K/5000K
CRI	Ra>90
Size	Ø60 x 102mm
Beam angle	200°
Material	Glass
Body colours	White
Voltage & current	48V

QPT50 / LUMINAIRE COLLECTION

HSA1006S

Folding Grille Lamp



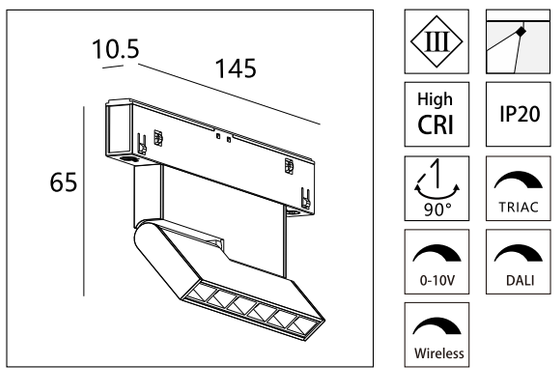

LED brand	OSRAM
Input	DC48V
Power	5W
CCT	2700K/3000K/4000K/5000K
CRI	Ra>90
Size	145 x 10.5 x 65mm
Beam angle	30°
Material	Aluminium
Body colours	Black
Voltage & current	48V

HSA1012S

Folding Grille Lamp



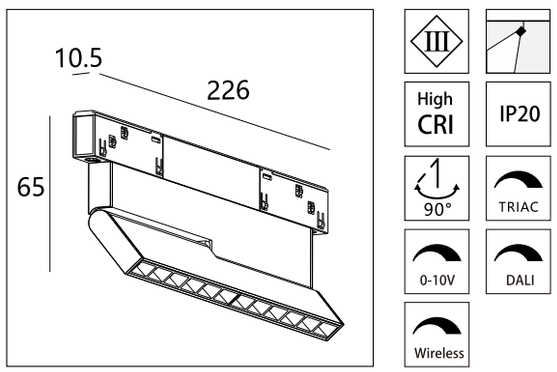

LED brand	OSRAM
Input	DC48V
Power	10W
CCT	2700K/3000K/4000K/5000K
CRI	Ra>90
Size	226 x 10.5 x 65mm
Beam angle	30°
Material	Aluminium
Body colours	Black
Voltage & current	48V

QPT50 / LUMINAIRE COLLECTION

HSB1020S

Folding Floodlights



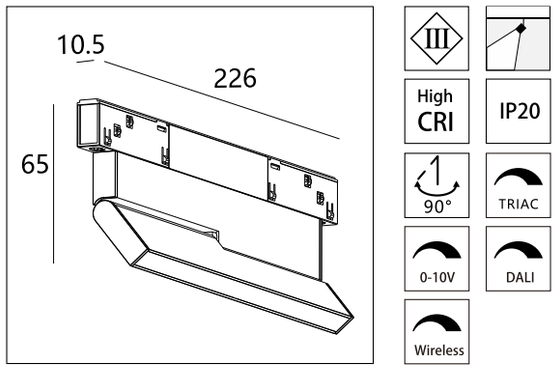

LED brand	SANAN
Input	DC48V
Power	8W
CCT	2700K/3000K/4000K/5000K
CRI	Ra>90
Size	226 x 10.5 x 65mm
Beam angle	100°
Material	Aluminium
Body colours	Black
Voltage & current	48V

HSB1030S

Folding Floodlights



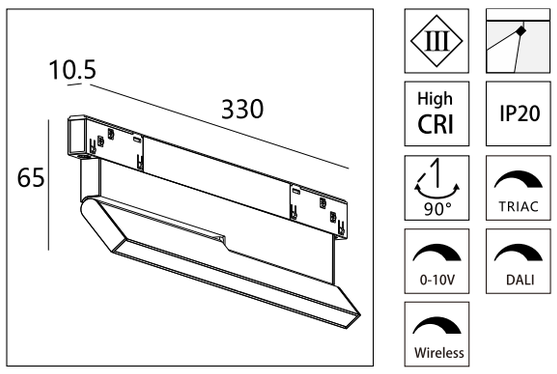

LED brand	SANAN
Input	DC48V
Power	16W
CCT	2700K/3000K/4000K/5000K
CRI	Ra>90
Size	330 x 10.5 x 65mm
Beam angle	100°
Material	Aluminium
Body colours	Black
Voltage & current	48V

QPT50 / LUMINAIRE COLLECTION

HLA1006S

Grille Lamp



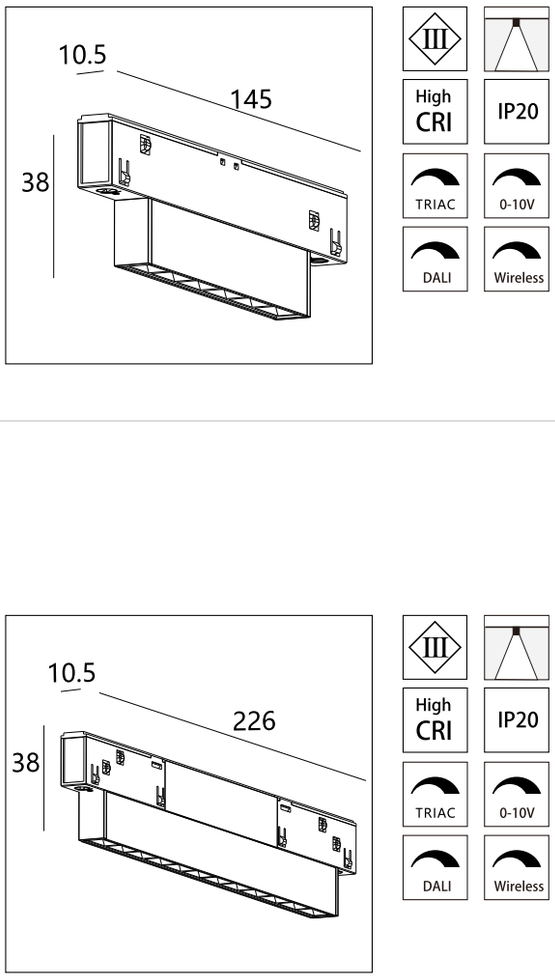

LED brand	OSRAM
Input	DC48V
Power	5W
CCT	2700K/3000K/4000K/5000K
CRI	Ra>90
Size	145 x 10.5 x 38mm
Beam angle	30°
Material	Aluminium
Body colours	Black
Voltage & current	48V

HLA1012S

Grille Lamp



LED brand	OSRAM
Input	DC48V
Power	10W
CCT	2700K/3000K/4000K/5000K
CRI	Ra>90
Size	226 x 10.5 x 38mm
Beam angle	30°
Material	Aluminium
Body colours	Black
Voltage & current	48V

QPT50 / LUMINAIRE COLLECTION

HLA1030S

Floodlights



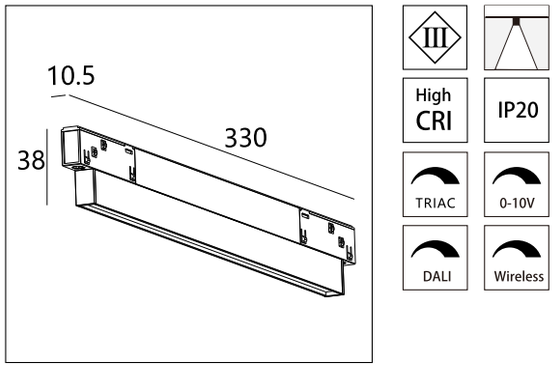

LED brand	SANAN
Input	DC48V
Power	8W
CCT	2700K/3000K/4000K/5000K
CRI	Ra>90
Size	330 x 10.5 x 38mm
Beam angle	100°
Material	Aluminium
Body colours	Black
Voltage & current	48V

HLA1045S

Floodlights



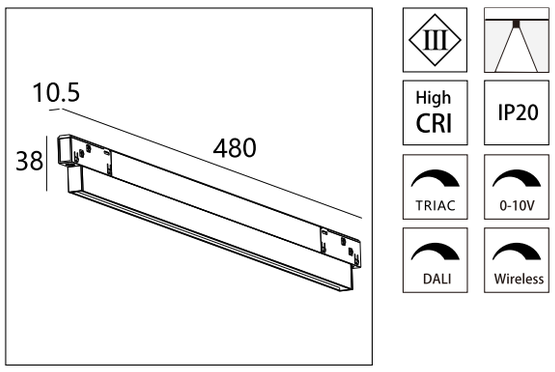

LED brand	SANAN
Input	DC48V
Power	12W
CCT	2700K/3000K/4000K/5000K
CRI	Ra>90
Size	480 x 10.5 x 65mm
Beam angle	100°
Material	Aluminium
Body colours	Black
Voltage & current	48V

Source size and drawing differ. See technical notes.

QPT50 / LUMINAIRE COLLECTION

HLA1060S

Floodlights



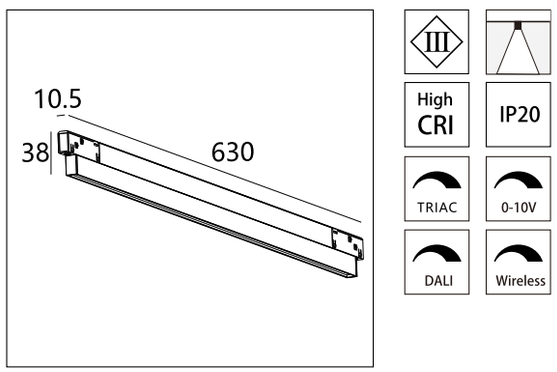

LED brand	SANAN
Input	DC48V
Power	16W
CCT	2700K/3000K/4000K/5000K
CRI	Ra>90
Size	630 x 10.5 x 38mm
Beam angle	100°
Material	Aluminium
Body colours	Black
Voltage & current	48V

HSA3035R

Spotlights



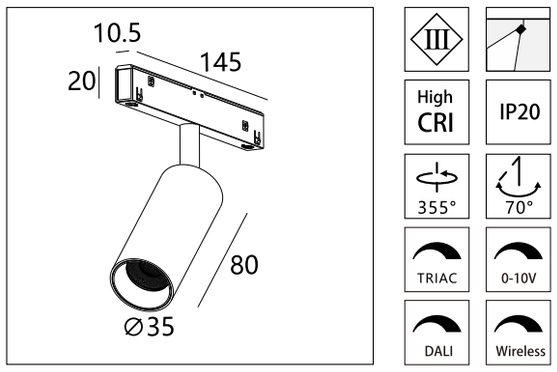

LED brand	OSRAM
Input	DC48V
Power	5W
CCT	2700K/3000K/4000K/5000K
CRI	Ra>90
Size	Ø35 x 80mm
Beam angle	15°/24°/36°
Material	Aluminium
Body colours	Black
Voltage & current	36V 120mA

QPT50 / LUMINAIRE COLLECTION

HSA3045R

Spotlights



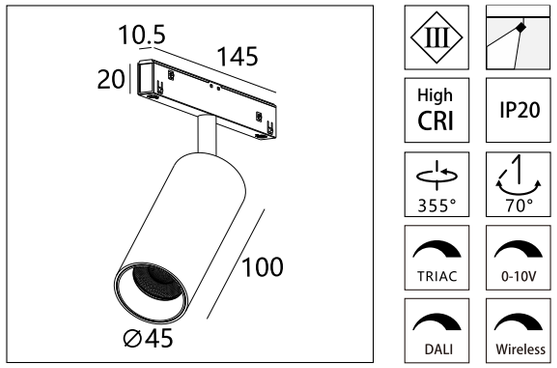

LED brand	OSRAM
Input	DC48V
Power	10W
CCT	2700K/3000K/4000K/5000K
CRI	Ra>90
Size	Ø45 x 100mm
Beam angle	15°/24°/36°
Material	Aluminium
Body colours	Black
Voltage & current	36V 250mA

HSA3060R

Spotlights



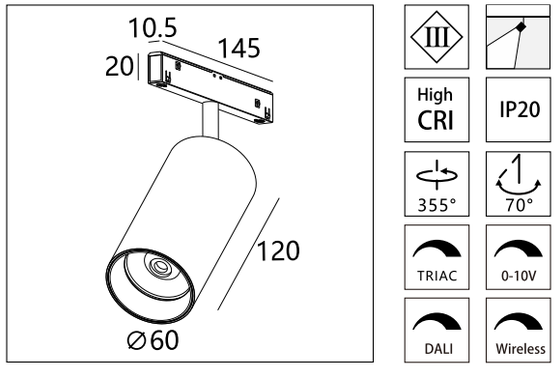

LED brand	OSRAM
Input	DC48V
Power	18W
CCT	2700K/3000K/4000K/5000K
CRI	Ra>90
Size	Ø60 x 120mm
Beam angle	15°/24°/36°
Material	Aluminium
Body colours	Black
Voltage & current	36V 400mA

QPT50 / LUMINAIRE COLLECTION

HLA1018S

Grille Lamp



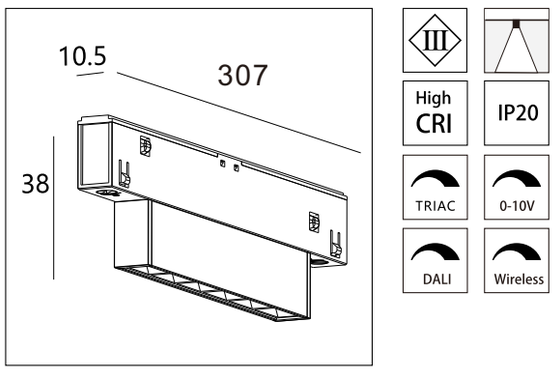

LED brand	OSRAM
Input	DC48V
Power	15W
CCT	2700K/3000K/4000K/5000K
CRI	Ra>90
Size	145 x 10.5 x 38mm
Beam angle	30°
Material	Aluminium
Body colours	Black
Voltage & current	48V

Source size and drawing differ. See technical notes.

HLA1024S

Grille Lamp



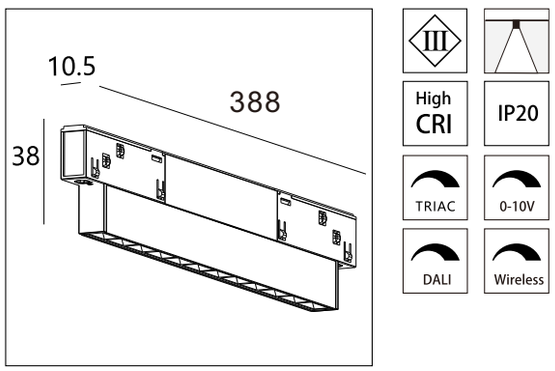

LED brand	OSRAM
Input	DC48V
Power	20W
CCT	2700K/3000K/4000K/5000K
CRI	Ra>90
Size	226 x 10.5 x 38mm
Beam angle	30°
Material	Aluminium
Body colours	Black
Voltage & current	48V

Source size and drawing differ. See technical notes.

QPT50 / LUMINAIRE COLLECTION

HSA3045R-S

Magnetic rail spotlight



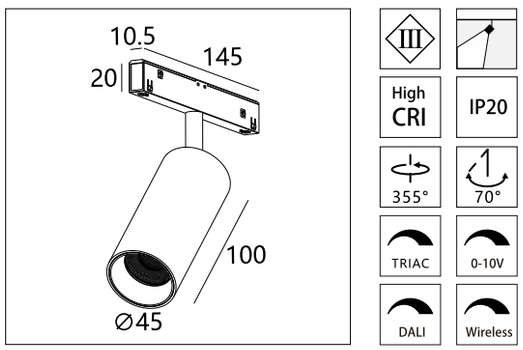

LED brand	OSRAM
Input	DC48V
Power	10W
CCT	3000K/4000K
CRI	Ra>90
Size	Ø45 x 100mm
Beam angle	24°/36°
Material	Aluminum
Body colours	See product image
Luminous flux	114lm

Luminous flux reproduced as supplied.

HSA3060R-S

Magnetic rail spotlight



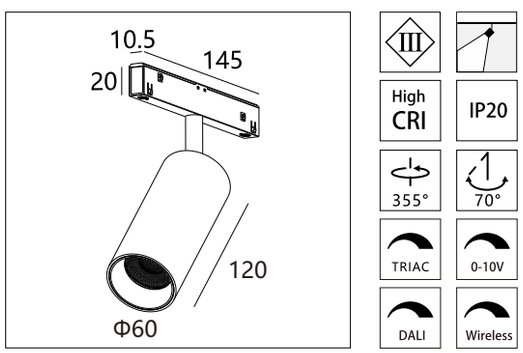

LED brand	OSRAM
Input	DC48V
Power	18W
CCT	3000K/4000K
CRI	Ra>90
Size	Ø60 x 120mm
Beam angle	24°/36°
Material	Aluminum
Body colours	See product image
Luminous flux	114lm

Luminous flux reproduced as supplied.

QPT50 / LUMINAIRE COLLECTION

HWB1002R

Floodlights



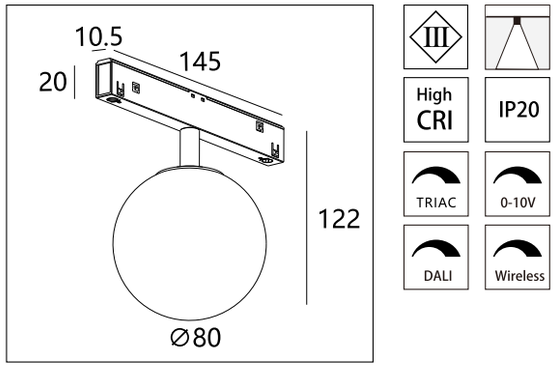

LED brand	SANAN
Input	DC48V
Power	3W
CCT	2700K/3000K/4000K/5000K
CRI	Ra>90
Size	Ø80 x 122mm
Beam angle	200°
Material	Glass
Body colours	White
Voltage & current	48V

HWB1003R

Floodlights



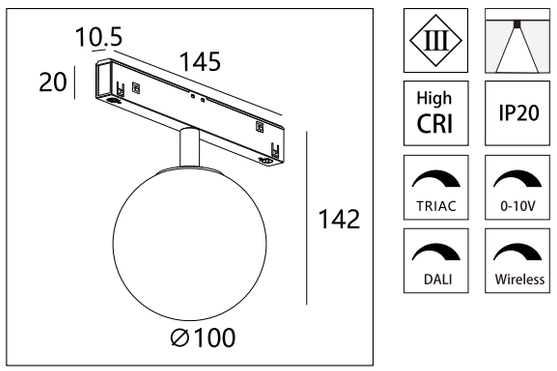

LED brand	SANAN
Input	DC48V
Power	5W
CCT	2700K/3000K/4000K/5000K
CRI	Ra>90
Size	Ø100 x 142mm
Beam angle	200°
Material	Glass
Body colours	White
Voltage & current	48V

QPT50 / LUMINAIRE COLLECTION

HWB1004R

Floodlights



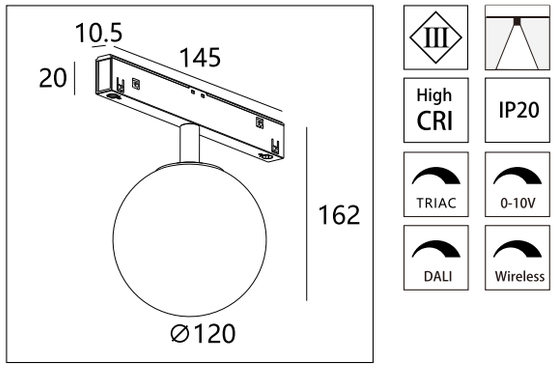

LED brand	SANAN
Input	DC48V
Power	5W
CCT	2700K/3000K/4000K/5000K
CRI	Ra>90
Size	Ø120 x 162mm
Beam angle	200°
Material	Glass
Body colours	White
Voltage & current	48V

HPB1002NR

Chandeliers

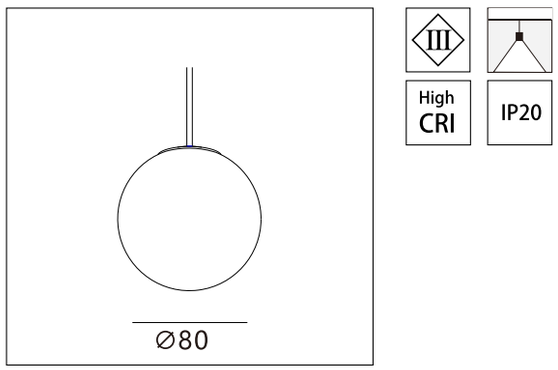

Light source	LED
Input	48V
Power	3W
CCT	2700K/3000K/4000K/5000K
CRI	Ra>90
Size	Ø80 mm
Beam angle	200°
Material	Glass
Body colours	White
Voltage & current	48V

QPT50 / LUMINAIRE COLLECTION

HPB1003NR

Chandeliers

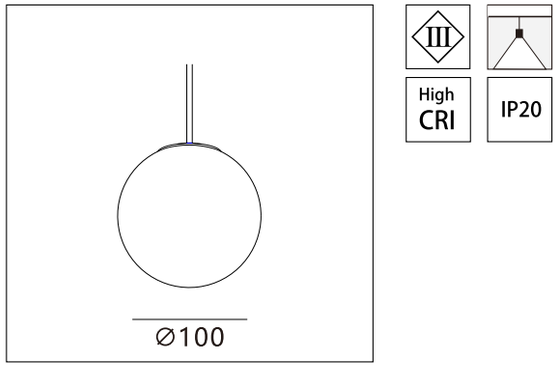

Light source	LED
Input	48V
Power	5W
CCT	2700K/3000K/4000K/5000K
CRI	Ra>90
Size	Ø100 mm
Beam angle	200°
Material	Glass
Body colours	White
Voltage & current	48V

HPB1004NR

Chandeliers

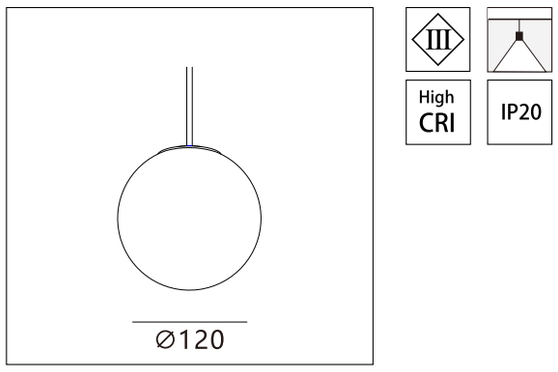

Light source	LED
Input	48V
Power	5W
CCT	2700K/3000K/4000K/5000K
CRI	Ra>90
Size	Ø120 mm
Beam angle	200°
Material	Glass
Body colours	White
Voltage & current	48V

QPT50 / LUMINAIRE COLLECTION

HPA3030RA

Chandeliers



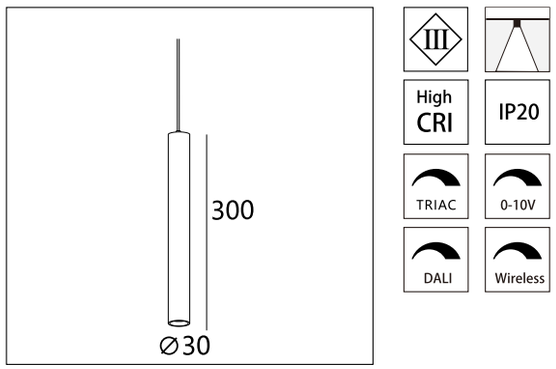

LED brand	OSRAM
Input	DC48V
Power	6W
CCT	2700K/3000K/4000K/5000K
CRI	Ra>90
Size	Ø30 x 300mm
Beam angle	24°
Material	Aluminium
Body colours	Black
Voltage & current	36V 150mA

HPA4030RA

Chandeliers



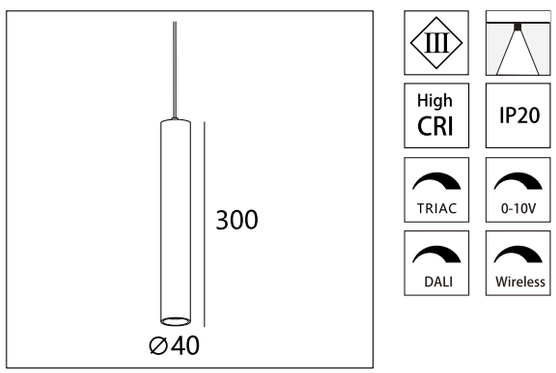

LED brand	OSRAM
Input	DC48V
Power	6W
CCT	2700K/3000K/4000K/5000K
CRI	Ra>90
Size	Ø40 x 300mm
Beam angle	15°/24°/36°
Material	Aluminium
Body colours	Black
Voltage & current	36V 150mA

QPT50 / LUMINAIRE COLLECTION

HSB1006DR

Magnetic Adjustable Angle Round Grille Lamp



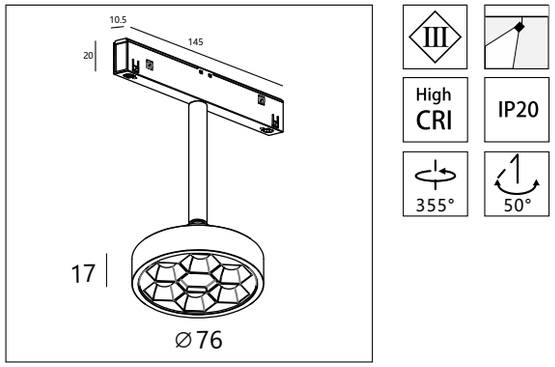

LED brand	OSRAM
Input	DC48V
Power	6W
CCT	2700K/3000K/4000K
CRI	Ra>90
Size	Ø76 x 17mm
Beam angle	90°
Material	Aluminium
Body colours	Black

HSB1018DR

Magnetic Adjustable Angle Round Grille Lamp



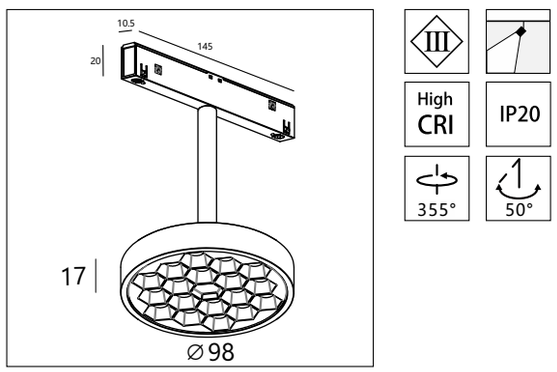

LED brand	OSRAM
Input	DC48V
Power	10W
CCT	2700K/3000K/4000K
CRI	Ra>90
Size	Ø98 x 17mm
Beam angle	90°
Material	Aluminium
Body colours	Black

QPT50 / LUMINAIRE COLLECTION

HPD1006NR

Round grille pendant light (up and down glow)



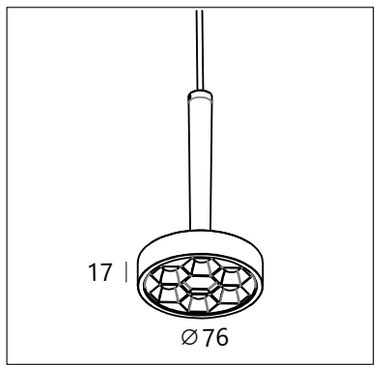

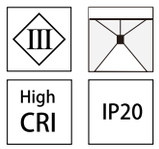

LED brand	OSRAM
Input	DC48V
Power	UP2W DN6W
CCT	2700K/3000K/4000K
CRI	Ra>90
Size	Ø76 x 28mm
Beam angle	90°
Material	Aluminium
Body colours	Black

HPD1018NR

Round grille pendant light (up and down glow)



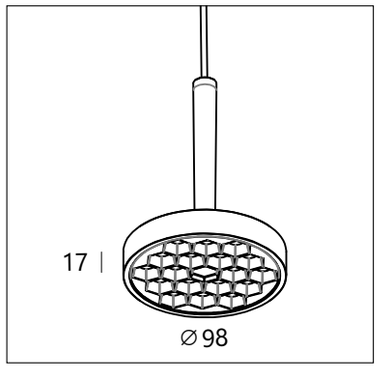

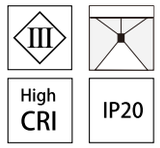

LED brand	OSRAM
Input	DC48V
Power	UP2W DN10W
CCT	2700K/3000K/4000K
CRI	Ra>90
Size	Ø98 x 28mm
Beam angle	90°
Material	Aluminium
Body colours	Black

QPT50 / LUMINAIRE COLLECTION

HSB1012DR

Magnetic Adjustable Angle Round Floodlight



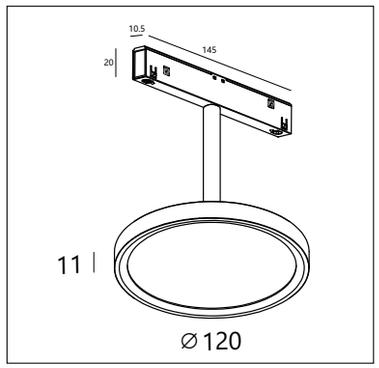

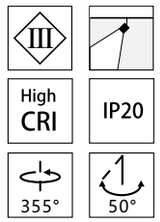

LED brand	SANAN
Input	DC48V
Power	7W
CCT	2700K/3000K/4000K
CRI	Ra>90
Size	Ø120 x 11mm
Beam angle	100°
Material	Aluminium
Body colours	Black

HSB1015DR

Magnetic Adjustable Angle Round Floodlight



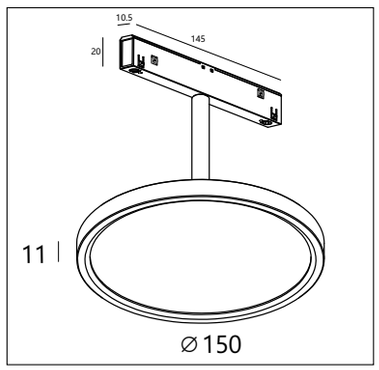

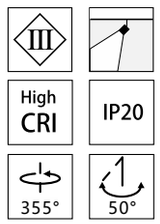

LED brand	SANAN
Input	DC48V
Power	10W
CCT	2700K/3000K/4000K
CRI	Ra>90
Size	Ø150 x 11mm
Beam angle	100°
Material	Aluminium
Body colours	Black

QPT50 / LUMINAIRE COLLECTION

HPB1015NR

Round floodlight pendant lamp



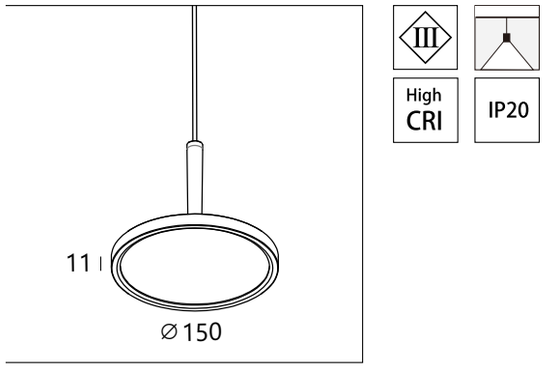

LED brand	SANAN
Input	DC48V
Power	10W
CCT	2700K/3000K/4000K
CRI	Ra>90
Size	Ø150 x 11mm
Beam angle	100°
Material	Aluminium
Body colours	Black

HPB1012NR

Round floodlight pendant lamp



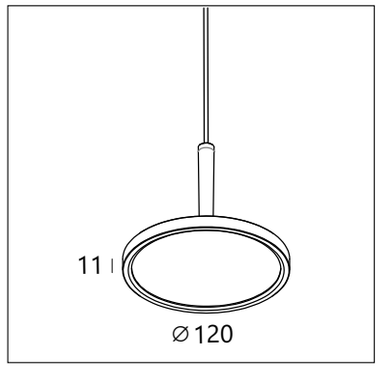

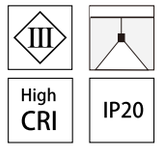

LED brand	SANAN
Input	DC48V
Power	7W
CCT	2700K/3000K/4000K
CRI	Ra>90
Size	Ø120 x 11mm
Beam angle	100°
Material	Aluminium
Body colours	Black

QPT50 / LUMINAIRE COLLECTION

HWW1060NR

Wall washer light



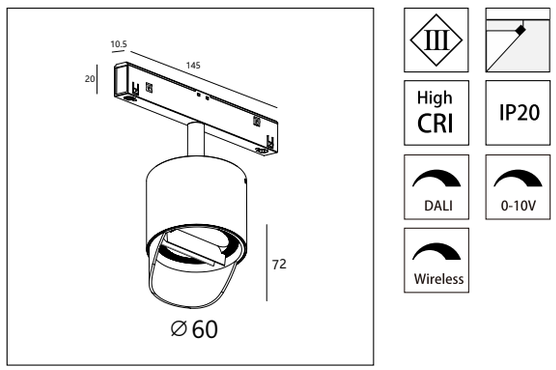

LED brand	OSRAM
Input	DC48V
Power	12W
CCT	2700K/3000K/4000K
CRI	Ra>90
Size	Ø60 x 72mm
Beam angle	/
Material	Aluminium
Body colours	Black / White

HLS1022-1M / HLS1022-2M / HLS1022-3M

Flexible Light Bar



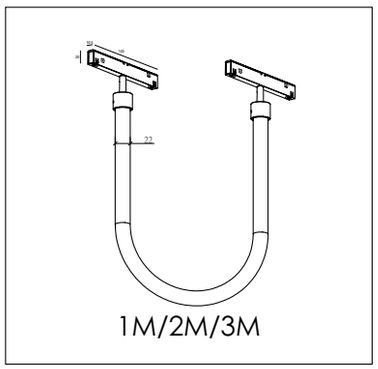

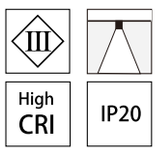

LED brand	SANAN
Input	DC48V
Power	16W/32W/48W
CCT	2700K/3000K/4000K
CRI	Ra>90
Size	Ø22 x 1000/2000/3000mm
Beam angle	360°
Material	Aluminium
Body colours	Black / White

QPT50 / LUMINAIRE COLLECTION

HLA3306S

Square Line Grille Lamp



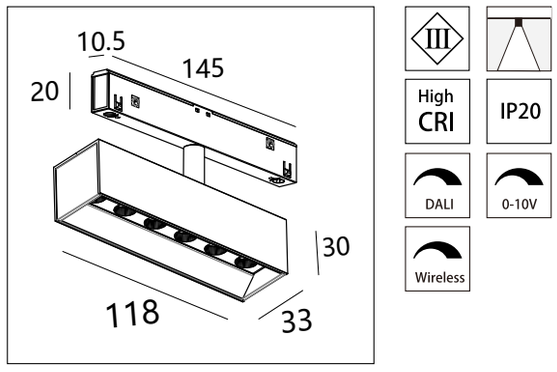

LED brand	OSRAM
Input	DC48V
Power	6W
CCT	2700K/3000K/4000K
CRI	Ra>90
Size	118 x 33 x 30mm
Beam angle	24°/36°
Material	Aluminium
Body colours	Black / White

HLA3312S

Square Line Grille Lamp



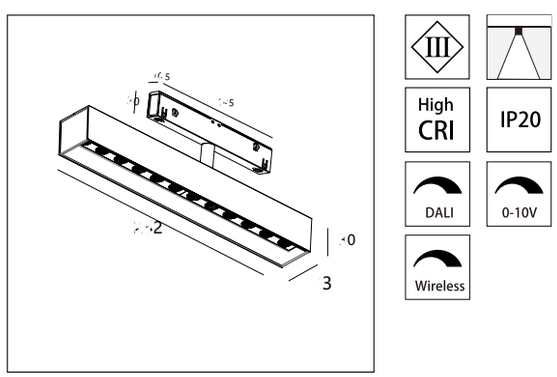

LED brand	OSRAM
Input	DC48V
Power	11W
CCT	2700K/3000K/4000K
CRI	Ra>90
Size	232 x 33 x 30mm
Beam angle	24°/36°
Material	Aluminium
Body colours	Black / White

Source text and visible artwork differ. See technical notes.

QPT50 / LUMINAIRE COLLECTION

HLA3318S

Square Line Grille Lamp



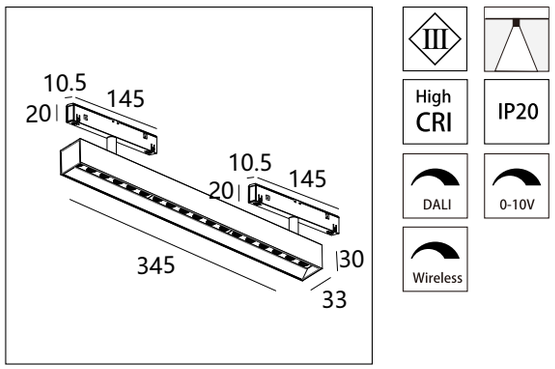

LED brand	OSRAM
Input	DC48V
Power	16W
CCT	2700K/3000K/4000K
CRI	Ra>90
Size	345 x 33 x 30mm
Beam angle	24°/36°
Material	Aluminium
Body colours	Black / White

HLA3324S

Square Line Grille Lamp



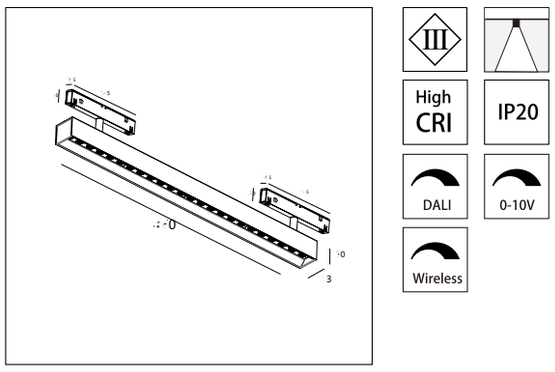

LED brand	OSRAM
Input	DC48V
Power	22W
CCT	2700K/3000K/4000K
CRI	Ra>90
Size	460 x 33 x 30mm
Beam angle	24°/36°
Material	Aluminium
Body colours	Black / White

QPT50 / LUMINAIRE COLLECTION

HPA3360S

Square Line Grille Pendant

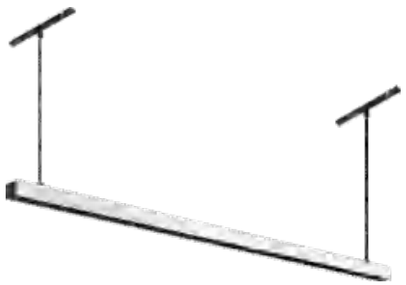

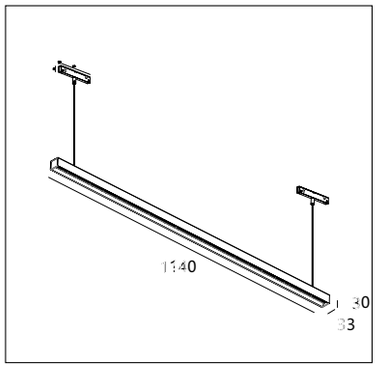

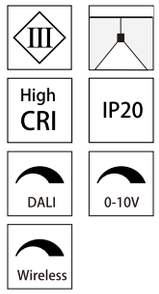

LED brand	OSRAM
Input	DC48V
Power	26W
CCT	2700K/3000K/4000K
CRI	Ra>90
Size	1140 x 33 x 30mm
Beam angle	24°/36°
Material	Aluminium
Body colours	Black / White

HLB33300S

Square Line Floodlight



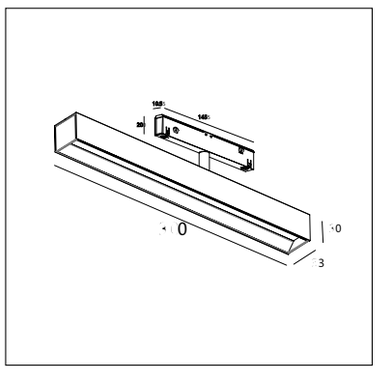

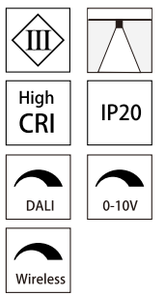

LED brand	SANAN
Input	DC48V
Power	8W
CCT	2700K/3000K/4000K
CRI	Ra>90
Size	300 x 33 x 30mm
Beam angle	100°
Material	Aluminium
Body colours	Black / White

QPT50 / LUMINAIRE COLLECTION

HLB33600S

Square Line Floodlight



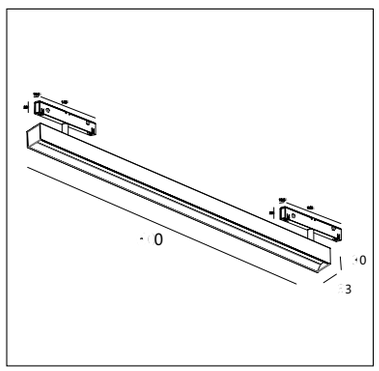

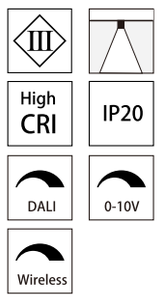

LED brand	SANAN
Input	DC48V
Power	15W
CCT	2700K/3000K/4000K
CRI	Ra>90
Size	600 x 33 x 30mm
Beam angle	100°
Material	Aluminium
Body colours	Black / White

HLB33900S

Square Line Floodlight



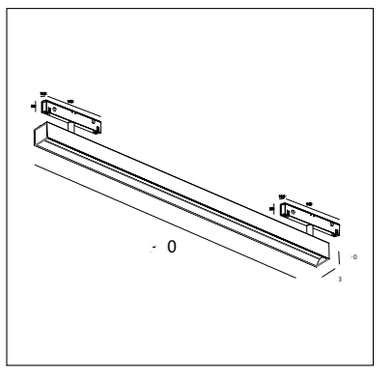

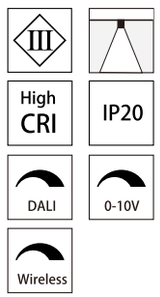

LED brand	SANAN
Input	DC48V
Power	22W
CCT	2700K/3000K/4000K
CRI	Ra>90
Size	900 x 33 x 30mm
Beam angle	100°
Material	Aluminium
Body colours	Black / White

QPT50 / LUMINAIRE COLLECTION

HPB331200S

Square Line Flood Pendant

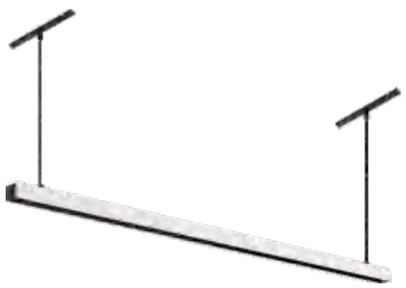

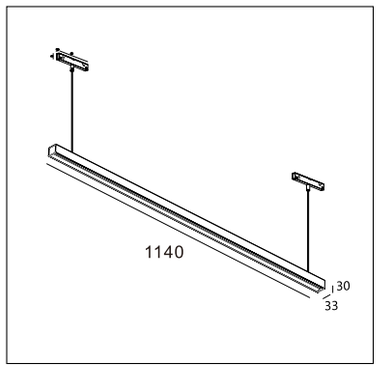

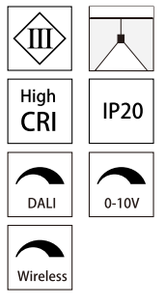

LED brand	SANAN
Input	DC48V
Power	28W
CCT	2700K/3000K/4000K
CRI	Ra>90
Size	1140 x 33 x 30mm
Beam angle	100°
Material	Aluminium
Body colours	Black / White

HLA4606R

Round Line Grille Lamp



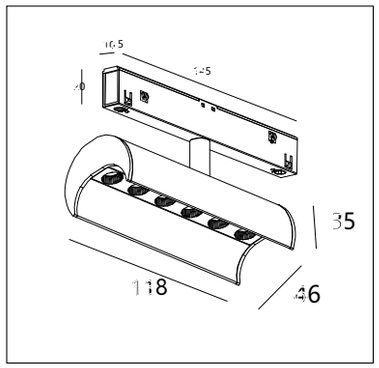

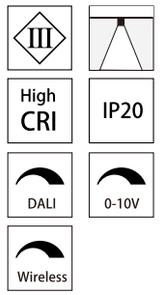

LED brand	OSRAM
Input	DC48V
Power	6W
CCT	2700K/3000K/4000K
CRI	Ra>90
Size	118 x 46 x 35mm
Beam angle	24°/36°
Material	Aluminium
Body colours	Black / White

QPT50 / LUMINAIRE COLLECTION

HPA7080RA

Chandeliers



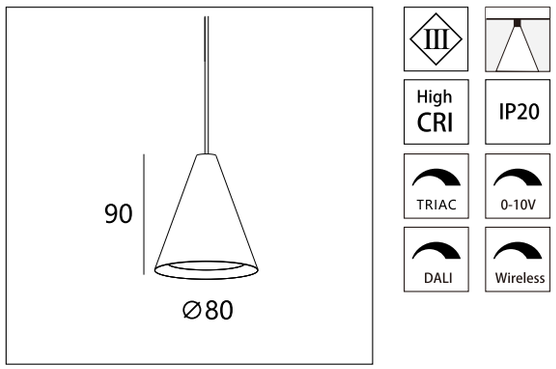

LED brand	OSRAM
Input	DC48V
Power	6W
CCT	2700K/3000K/4000K/5000K
CRI	Ra>90
Size	Ø80 x 90mm
Beam angle	40°
Material	Aluminium
Body colours	See product image
Voltage & current	36V 150mA
Luminous flux	260 lm

HPA9075RA

Chandeliers



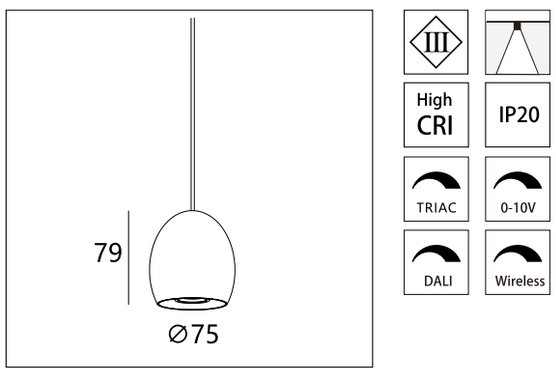

LED brand	OSRAM
Input	DC48V
Power	6W
CCT	2700K/3000K/4000K/5000K
CRI	Ra>90
Size	Ø75 x 79mm
Beam angle	40°
Material	Aluminium
Body colours	BK / WH / Grey
Voltage & current	36V 150mA
Luminous flux	260 lm

QPT50 / LUMINAIRE COLLECTION

HWW3305NS

Wall washer light



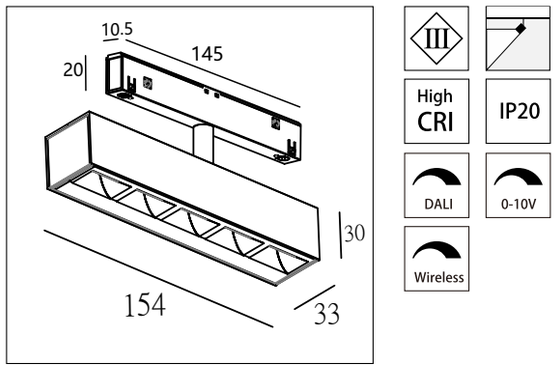

LED brand	Luminus
Input	DC48V
Power	8W
CCT	2700K/3000K/4000K/5000K
CRI	Ra>90
Size	154 x 33 x 30mm
Beam angle	/
Material	Aluminium
Body colours	BK

HWW3310NS

Wall washer light



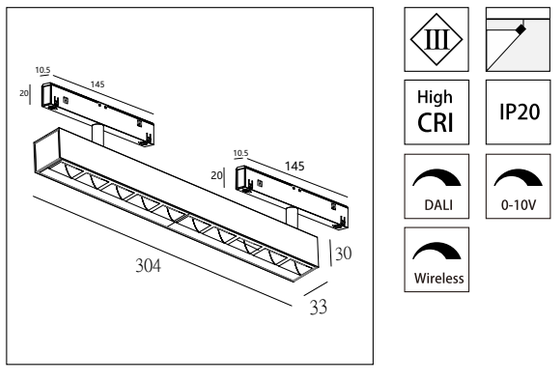

LED brand	Luminus
Input	DC48V
Power	15W
CCT	2700K/3000K/4000K/5000K
CRI	Ra>90
Size	304 x 33 x 30mm
Beam angle	/
Material	Aluminium
Body colours	BK

QPT50 / LUMINAIRE COLLECTION

HLA4612R

Round Line Grille Lamp



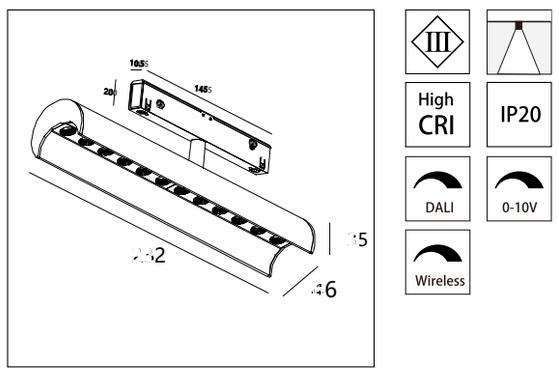

LED brand	OSRAM
Input	DC48V
Power	11W
CCT	2700K/3000K/4000K
CRI	Ra>90
Size	232 x 46 x 35mm
Beam angle	24°/36°
Material	Aluminium
Body colours	Black / White

HLA4618R

Round Line Grille Lamp



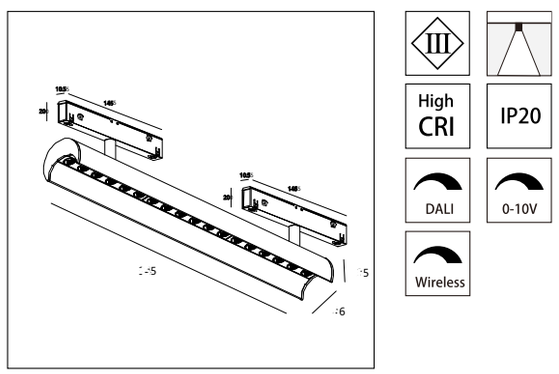

LED brand	OSRAM
Input	DC48V
Power	16W
CCT	2700K/3000K/4000K
CRI	Ra>90
Size	345 x 46 x 35mm
Beam angle	24°/36°
Material	Aluminium
Body colours	Black / White

QPT50 / LUMINAIRE COLLECTION

HLA4624R

Round Line Grille Lamp



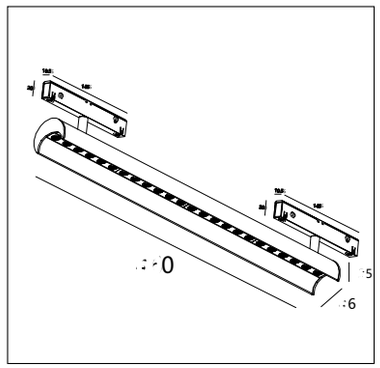

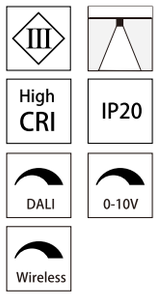

LED brand	OSRAM
Input	DC48V
Power	22W
CCT	2700K/3000K/4000K
CRI	Ra>90
Size	460 x 46 x 35mm
Beam angle	24°/36°
Material	Aluminium
Body colours	Black / White

HPA4660R

Round Line Grille Pendant



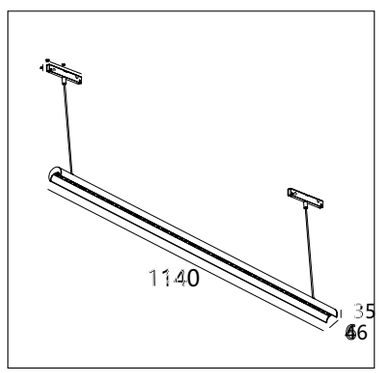

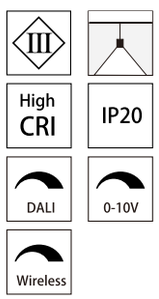

LED brand	OSRAM
Input	DC48V
Power	26W
CCT	2700K/3000K/4000K
CRI	Ra>90
Size	1140 x 46 x 35mm
Beam angle	24°/36°
Material	Aluminium
Body colours	Black / White

QPT50 / LUMINAIRE COLLECTION

HLB46300R

Round Line Floodlight



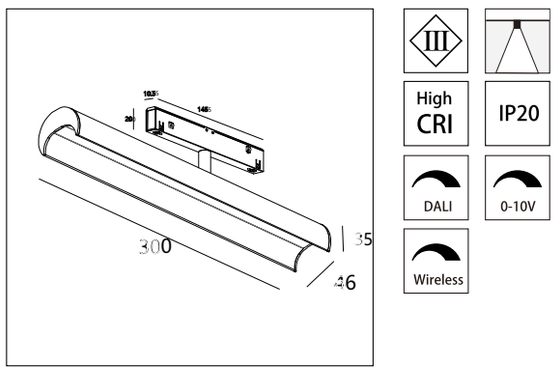

LED brand	SANAN
Input	DC48V
Power	8W
CCT	2700K/3000K/4000K/5000K
CRI	Ra>90
Size	300 x 46 x 35mm
Beam angle	100°
Material	Aluminium
Body colours	Black

HLB46600R

Round Line Floodlight



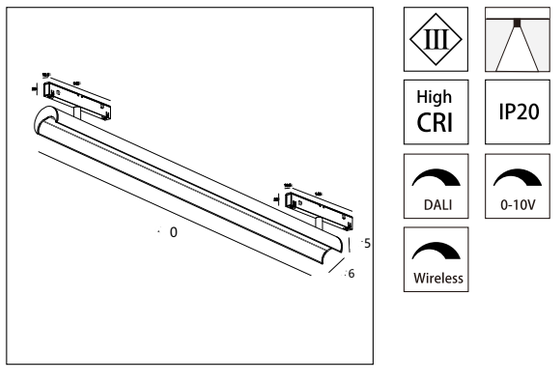

LED brand	SANAN
Input	DC48V
Power	15W
CCT	2700K/3000K/4000K/5000K
CRI	Ra>90
Size	600 x 46 x 35mm
Beam angle	100°
Material	Aluminium
Body colours	Black

QPT50 / LUMINAIRE COLLECTION

HLB46900R

Round Line Floodlight



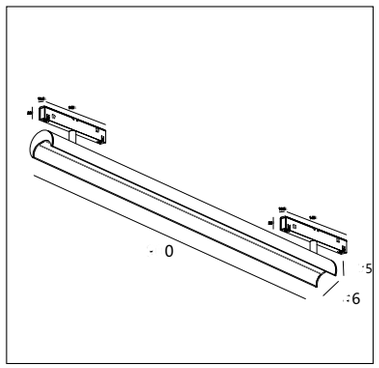

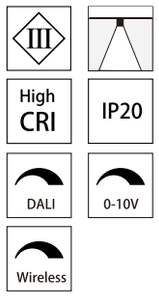

LED brand	SANAN
Input	DC48V
Power	22W
CCT	2700K/3000K/4000K/5000K
CRI	Ra>90
Size	900 x 46 x 35mm
Beam angle	100°
Material	Aluminium
Body colours	Black

HPB461200R

Round Line Flood Pendant



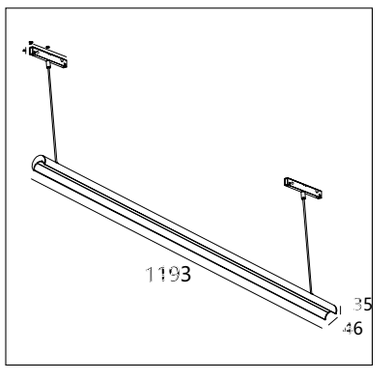

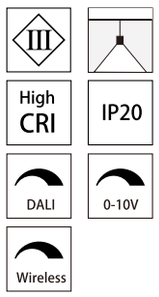

LED brand	SANAN
Input	DC48V
Power	28W
CCT	2700K/3000K/4000K/5000K
CRI	Ra>90
Size	1140 x 46 x 35mm
Beam angle	100°
Material	Aluminium
Body colours	Black

QPT50 / LUMINAIRE COLLECTION

HWB1024NS-A

Fixed type grille lamp



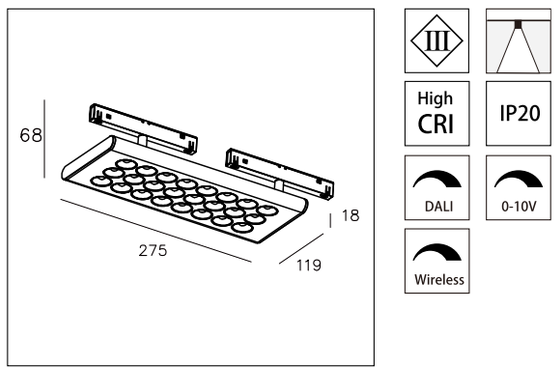

LED brand	OSRAM
Input	DC48V
Power	24W
CCT	2700K/3000K/4000K/5000K
CRI	Ra>90
Size	275 x 119 x 68mm
Beam angle	60°/90°
Material	Aluminium
Body colours	Black / White

HWB1024DS

Swing style grille lamp



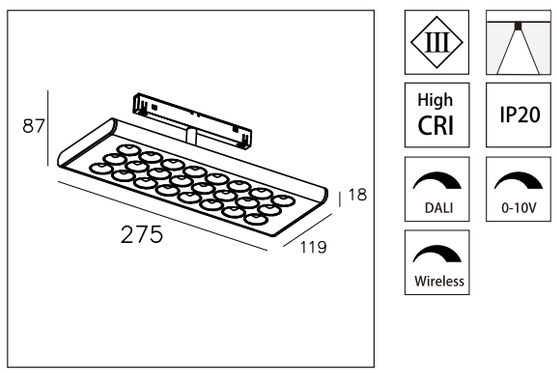

LED brand	OSRAM
Input	DC48V
Power	24W
CCT	2700K/3000K/4000K/5000K
CRI	Ra>90
Size	275 x 119 x 87mm
Beam angle	60°/90°
Material	Aluminium
Body colours	Black / White

QPT50 / LUMINAIRE COLLECTION

HWB1024NS-B

Fixed type grille lamp



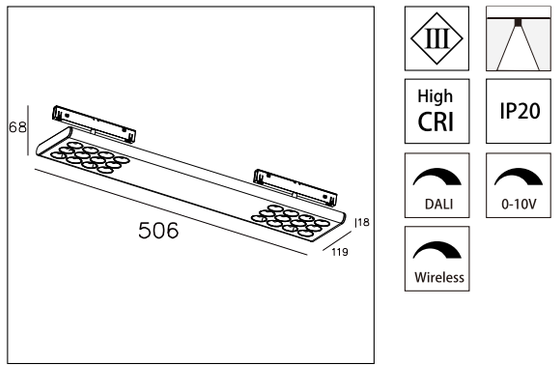

LED brand	OSRAM
Input	DC48V
Power	24W
CCT	2700K/3000K/4000K/5000K
CRI	Ra>90
Size	506 x 119 x 68mm
Beam angle	60°/90°
Material	Aluminium
Body colours	Black / White

HSA4702DR

Spotlights



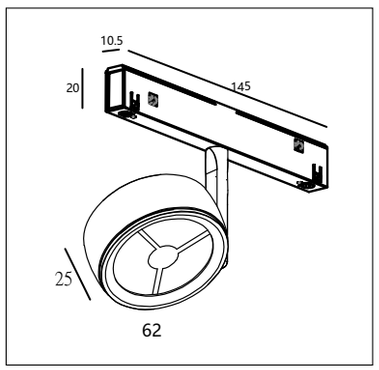

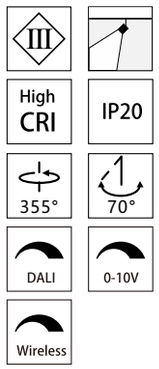

LED brand	OSRAM
Input	DC48V
Power	9W
CCT	2700K/3000K/4000K
CRI	Ra>90
Size	Ø86mm
Beam angle	12°/24°
Material	Aluminium
Body colours	Black / White

QPT50 / LUMINAIRE COLLECTION

HSA4501DR

Spotlights



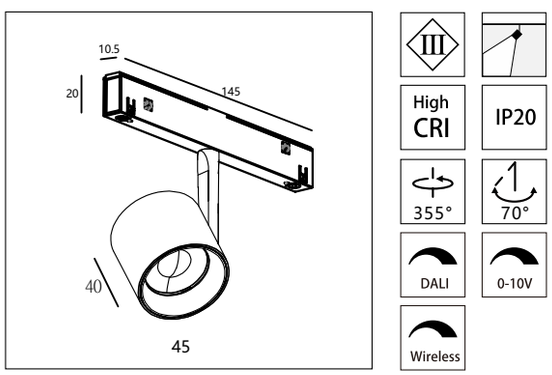

LED brand	OSRAM
Input	DC48V
Power	5W
CCT	2700K/3000K/4000K
CRI	Ra>90
Size	Ø45 x 40mm
Beam angle	15°/24°/36°
Material	Aluminium
Body colours	Black / White / silver-grey / brass

HSA4502DR

Spotlights



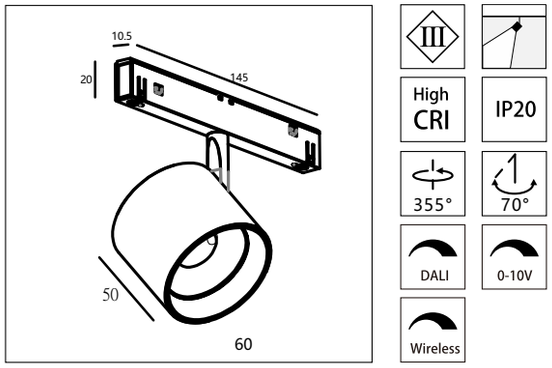

LED brand	OSRAM
Input	DC48V
Power	9W
CCT	2700K/3000K/4000K
CRI	Ra>90
Size	Ø60 x 50mm
Beam angle	15°/24°/36°
Material	Aluminium
Body colours	Black / White / silver-grey / brass

QPT50 / LUMINAIRE COLLECTION

HSA4601DR

Spotlights



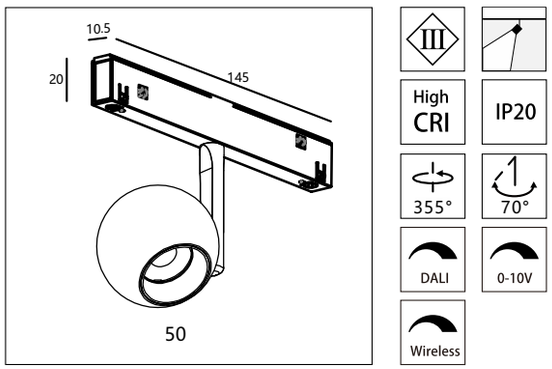

LED brand	OSRAM
Input	DC48V
Power	5W
CCT	2700K/3000K/4000K
CRI	Ra>90
Size	Ø50mm
Beam angle	15°/24°/36°
Material	Aluminium
Body colours	Black / White / silver-grey / brass

HSA4701DR

Spotlights



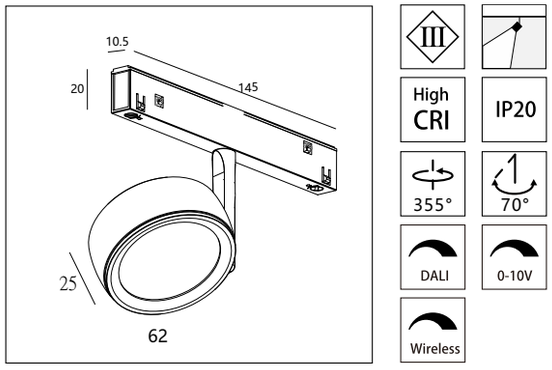

LED brand	OSRAM
Input	DC48V
Power	5W
CCT	2700K/3000K/4000K
CRI	Ra>90
Size	Ø62mm
Beam angle	12°/24°
Material	Aluminium
Body colours	Black / White / silver-grey / brass

QPT50 / LUMINAIRE COLLECTION

HLA3006NS

H10 SERIES

grille light



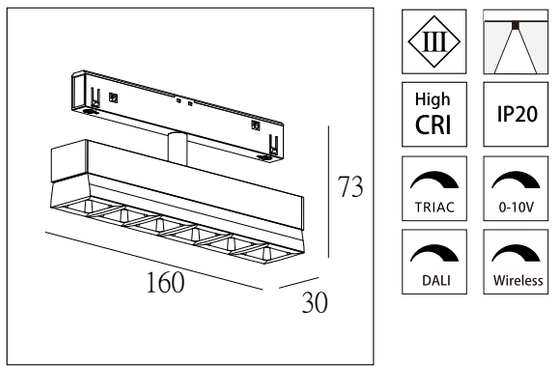

LED brand	OSRAM
Input	48V
Power	6W
CCT	2700K/3000K/4000K/5000K
CRI	Ra>90
Size	160 x 30 x 73
Beam angle	45°
Material	Aluminium
Body colours	BK
Voltage & current	48V

HLA3012NS

H10 SERIES

grille light



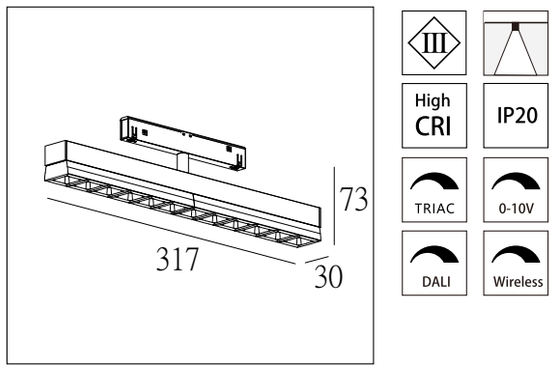

LED brand	OSRAM
Input	48V
Power	12W
CCT	2700K/3000K/4000K/5000K
CRI	Ra>90
Size	317 x 30 x 73
Beam angle	45°
Material	Aluminium
Body colours	BK
Voltage & current	48V

QPT50 / LUMINAIRE COLLECTION

HLA3018NS

H10 SERIES

grille light



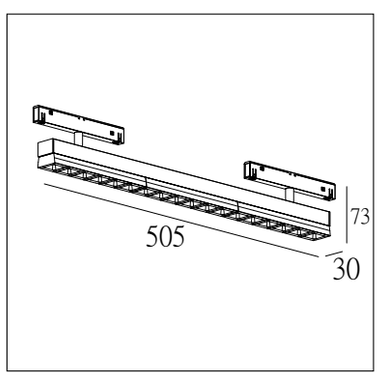

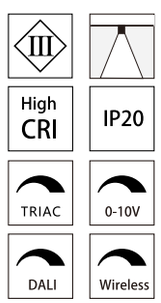

LED brand	OSRAM
Input	DC48V
Power	18W
CCT	2700K/3000K/4000K/5000K
CRI	Ra>90
Size	505 x 30 x 73
Beam angle	45°
Material	Aluminium
Body colours	BK
Voltage & current	48V

HLA3024NS

H10 SERIES

grille light



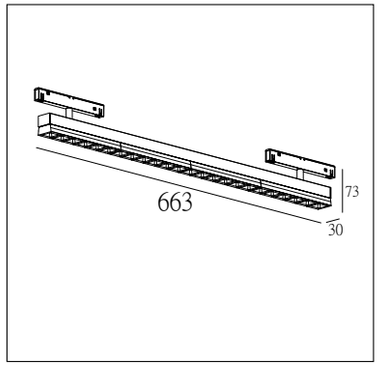

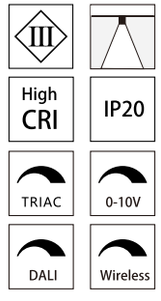

LED brand	OSRAM
Input	DC48V
Power	24W
CCT	2700K/3000K/4000K/5000K
CRI	Ra>90
Size	663 x 30 x 73
Beam angle	45°
Material	Aluminium
Body colours	BK
Voltage & current	48V

QPT50 / LUMINAIRE COLLECTION

HPA3042NS

H10 SERIES

Chandeliers

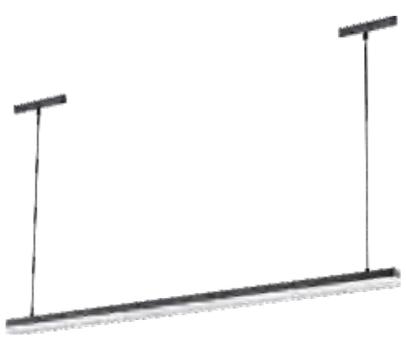

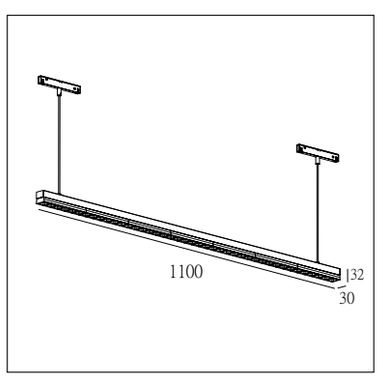

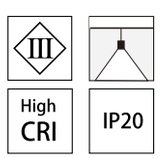

LED brand	OSRAM
Input	DC48V
Power	30W
CCT	2700K/3000K/4000K/5000K
CRI	Ra>90
Size	1100 x 30 x 32
Beam angle	45°
Material	Aluminium
Body colours	BK
Voltage & current	48V

HWA0560-A

Spotlights (Round hole front cover)



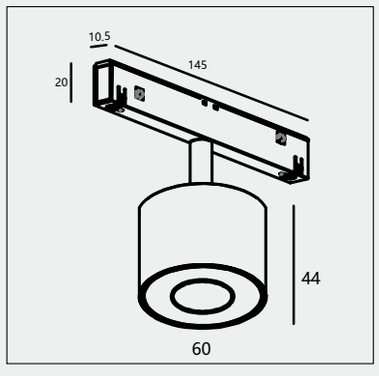

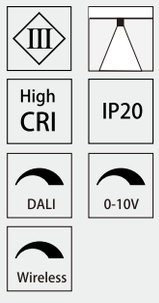

LED brand	OSRAM
Input	DC48V
Power	9W
CCT	2700K/3000K/4000K/5000K
CRI	Ra>90
Size	Ø60 x 57mm
Beam angle	15°/24°/36°
Material	Aluminium
Body colours	Black

QPT50 / LUMINAIRE COLLECTION

HWA0560-B

Spotlights (curved surface front cover)



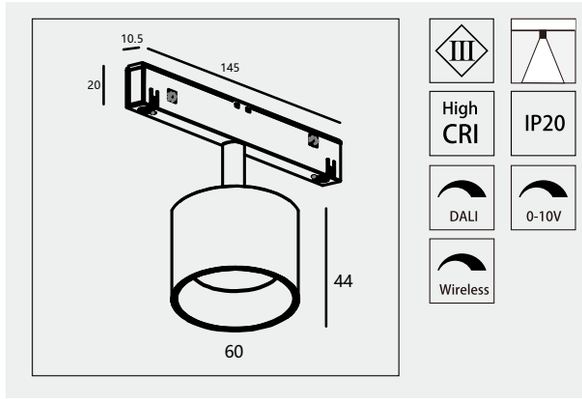

LED brand	OSRAM
Input	DC48V
Power	9W
CCT	2700K/3000K/4000K/5000K
CRI	Ra>90
Size	Ø60 x 57mm
Beam angle	15°/24°/36°
Material	Aluminium
Body colours	Black

HWA0560-C

Spotlights (inclined plane front cover)



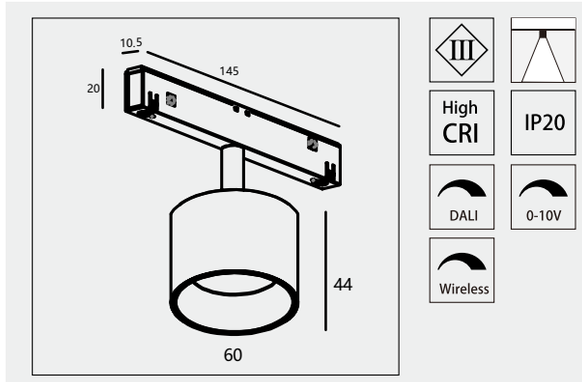

LED brand	OSRAM
Input	DC48V
Power	9W
CCT	2700K/3000K/4000K/5000K
CRI	Ra>90
Size	Ø60 x 57mm
Beam angle	15°/24°/36°
Material	Aluminium
Body colours	Black

QPT50 / LUMINAIRE COLLECTION

HSA0435R

Spotlights



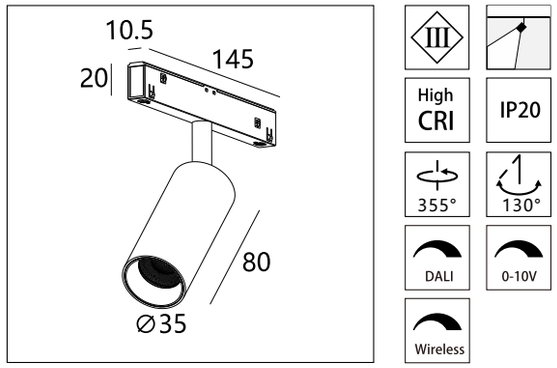

LED brand	OSRAM
Input	DC48V
Power	5W
CCT	2700K/3000K/4000K/5000K
CRI	Ra>90
Size	Ø35 x 80mm
Beam angle	15°/24°/36°
Material	Aluminium
Body colours	Black

HSA0445R

Spotlights



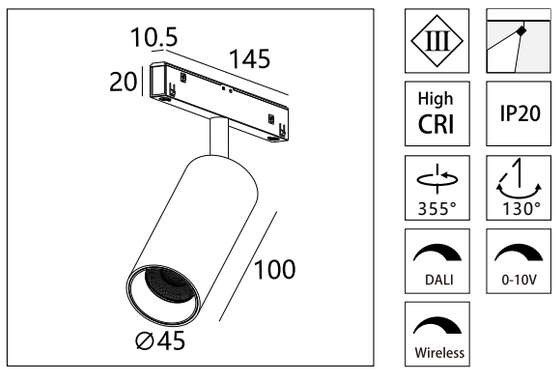

LED brand	OSRAM
Input	DC48V
Power	10W
CCT	2700K/3000K/4000K/5000K
CRI	Ra>90
Size	Ø45 x 100mm
Beam angle	24°/36°
Material	Aluminium
Body colours	Black

QPT50 / LUMINAIRE COLLECTION

HSA0460R

Spotlights



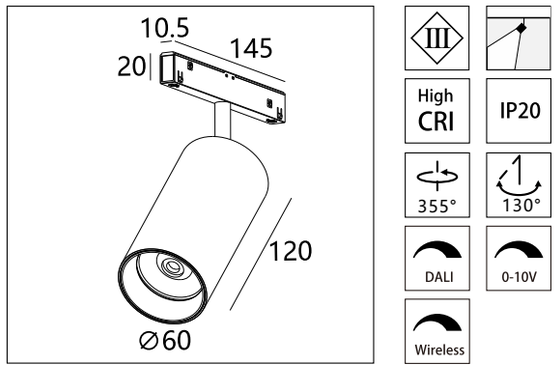

LED brand	OSRAM
Input	DC48V
Power	18W
CCT	2700K/3000K/4000K/5000K
CRI	Ra>90
Size	Ø60 x 120mm
Beam angle	24°/36°
Material	Aluminium
Body colours	Black

GRILLE LIGHT / CONSTRUCTION DETAIL



SOURCE DATA / TECHNICAL NOTES

HLA1045S	The source size field states 480 x 10.5 x 65mm. Its drawing indicates a height of 38mm.
HLA1018S / HLA1024S	Source size fields state lengths of 145mm and 226mm. Drawings show 307mm and 388mm respectively.
HLA3312S	The source text layer states 232 x 33 x 30mm. Visible size artwork appears as 323 x 33 x 30mm and the drawing shows 222mm.
HPB461200R	The size field states a length of 1140mm. The drawing indicates 1193mm.
HSA4702DR	The size field states Ø86mm. The source drawing includes Ø62mm.
HSA3045R-S / HSA3060R-S	Both source cards state 114lm, with powers of 10W and 18W respectively.
HWA0560-A / HWA0560-B / HWA0560-C	The size fields state Ø60 x 57mm. The source drawings indicate a body height of 44mm.

The collection reproduces the supplied technical values and drawings. These differences require clarification before specification or ordering.

MODEL INDEX

MODEL	PAGE
GL45-E183-D	13
GL45-E67-D	13
HLA1006S	20
HLA1012S	20
HLA1018S	24
HLA1024S	24
HLA1030S	21
HLA1045S	21
HLA1060S	22
HLA3006NS	50
HLA3012NS	50
HLA3018NS	51
HLA3024NS	51
HLA3306S	35
HLA3312S	35
HLA3318S	36
HLA3324S	36
HLA4606R	39

MODEL	PAGE
HLA4612R	42
HLA4618R	42
HLA4624R	43
HLB33300S	37
HLB33600S	38
HLB33900S	38
HLB46300R	44
HLB46600R	44
HLB46900R	45
HLS1022-1M	34
HLS1022-2M	34
HLS1022-3M	34
HPA3030RA	29
HPA3042NS	52
HPA3360S	37
HPA4030RA	29
HPA4660R	43
HPA7080RA	40

MODEL INDEX

MODEL	PAGE
HPA9075RA	40
HPB1002NR	27
HPB1003NR	28
HPB1004NR	28
HPB1012NR	33
HPB1015NR	33
HPB331200S	39
HPB461200R	45
HPD1006NR	31
HPD1018NR	31
HSA0435R	54
HSA0445R	54
HSA0460R	55
HSA1006S	18
HSA1012S	18
HSA3035R	22
HSA3045R	23
HSA3045R-S	25

MODEL	PAGE
HSA3060R	23
HSA3060R-S	25
HSA4501DR	48
HSA4502DR	48
HSA4601DR	49
HSA4701DR	49
HSA4702DR	47
HSB1006DR	30
HSB1012DR	32
HSB1015DR	32
HSB1018DR	30
HSB1020S	19
HSB1030S	19
HSB8513DR	16
HSB8514DR	16
HST-E00	7
HST-E01	7
HWA0560-A	52

MODEL INDEX

MODEL	PAGE
HWA0560-B	53
HWA0560-C	53
HWA4150R-A	17
HWB1001R	17
HWB1002R	26
HWB1003R	26
HWB1004R	27
HWB1024DS	46
HWB1024NS-A	46
HWB1024NS-B	47
HWW1060NR	34
HWW3305NS	41
HWW3310NS	41
QPT-B01	7
QPT-END-A	12
QPT-END-B	12
QPT-F01	12
QPT-L02	13

MODEL	PAGE
QPT-P01	13
QPT-P02	13
QPT-S02-P	14
QPT-S02-W	14
QPT-S03-P	14
QPT-S03-W	14
QPT-S04-P	14
QPT-S04-W	14
QPT-W01	13
QPT50-0.5M	11
QPT50-1M	11
QPT50-2.5M	11
QPT50-2M	11
QPTW-END-A	12
QPTW-END-B	12
QPTW-F01	12

ONELUX / GENERAL LIGHTING LLC

Architectural lighting for your next project.

General Lighting LLC

Baku, Azerbaijan

www.generallighting.az

+994 50 400 50 08

Instagram: @general_lighting

Explore the collection online

generallighting.az